FASTTRAK

Simple, Strong, Quick & Easy.

ASSEMBLY INSTRUCTIONS - F36 - S

REVISION 06/26

SCAN THIS FOR HOW TO BUILD VIDEO.

Outside base frame dimensions: W2105mm x D1070mm x H1800mm

BEFORE COMMENCING SHED ASSEMBLY, CHECK ALL PARTS.
IF THERE IS A DISCREPANCY, PLEASE CALL STEEL SHEDS AUSTRALIA (SEE REAR OF INSTRUCTION BOOK).

DO NOT ASSEMBLE IN WINDY CONDITIONS	READ INSTRUCTIONS FIRST	2 PERSONS ASSEMBLY

THE MANUFACTURERS CANNOT BE HELD RESPONSIBLE FOR ANY CONSEQUENCES DUE TO SHEDS THAT ARE NOT INSTALLED PER INSTRUCTIONS OR FOR DAMAGE DUE TO WEATHER CONDITIONS, ACTS OF GOD OR FOR SHEDS THAT ARE LEFT PARTIALLY ASSEMBLED OVERNIGHT. PARTS MAY CONTAIN SHARP EDGES & CORNERS. CARE MUST BE TAKEN WHEN HANDLING VARIOUS PIECES TO AVOID A MISHAP, FOR SAFETY SAKE, PLEASE USE A PAIR OF WORK GLOVES, EYE PROTECTION & PROTECTIVE CLOTHING WHEN ASSEMBLING OR PERFORMING ANY MAINTENANCE ON THE BUILDING.

F36-S ASSEMBLY MANUAL

TABLE OF CONTENT

TOOLS REQUIRED 3

HANDY HINTS FOR CONSTRUCTION 3

BRACKETS 4

HARDWARES 4

SHEET IDENTIFICATION 5

SECTIONS 6

FOUNDATION 7

TYPICAL SHEET FIXING DETAILS 8

SIDE WALL PANELS 9

REAR WALL PANEL 10

STAND AND JOIN WALL PANELS 11

DOOR JAMB FIXING DETAILS 13

DOOR OPENING 16

ROOF SHEETINGS & TRIMS 17

ANCHORING SHED TO SLAB 19

DOOR ASSEMBLY 21

DOOR FITTING 25

CARE AND MAINTENANCE (15 YEARS WARRANTY) 26

F36-S ASSEMBLY MANUAL

TOOLS REQUIRED

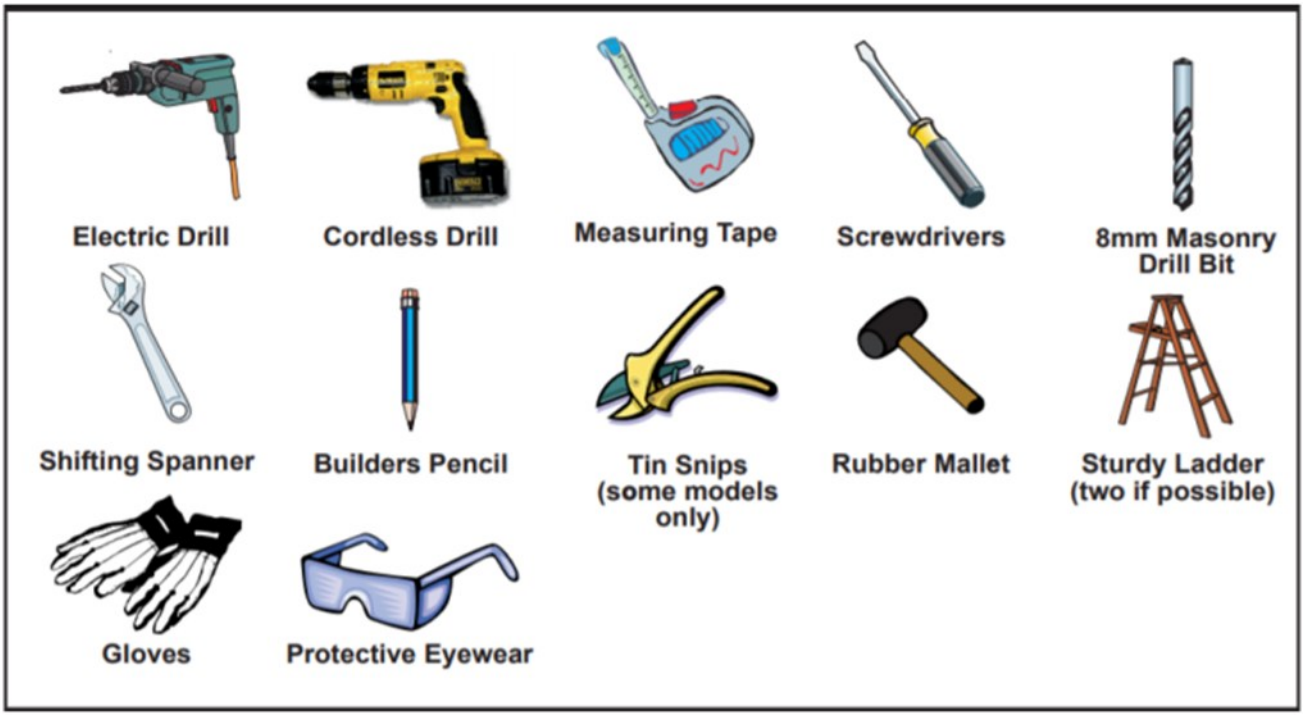

HANDY HINTS FOR CONSTRUCTION

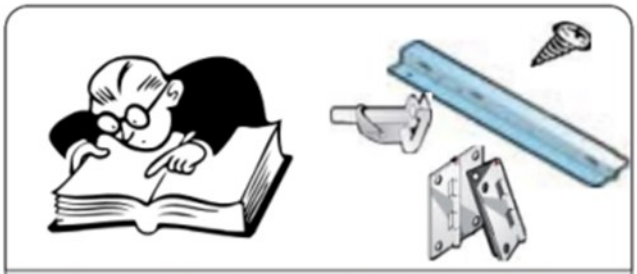

Read instructions and check parts carefully before assembling the shed.

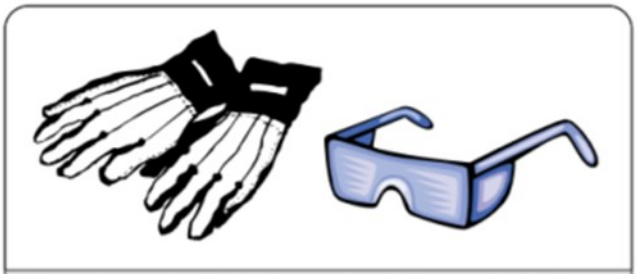

Please wear safety gloves and glasses at all times to protect against sharp metal edges.

Do not assemble in windy conditions as panels may be difficult to handle and damage may result.

Do not back fill against the shed as this will result in corrosion. Allow drainage from the site.

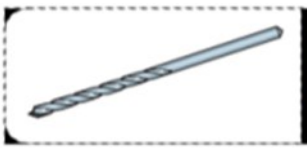

MOST PILOT HOLES ARE PRE-PUNCHED AND IN THIS CASE DRILLING HOLES IS NOT NECESSARY, HOWEVER SOME PILOT HOLES NEED TO BE DRILLED WITH THE INCLUDED 2.5MM DRILL BIT WHERE INDICATED

F36-S ASSEMBLY MANUAL

BRACKETS

CORNER BRACKET X4	
HINGES X 2	
PADBOLT & KEEPER X 1	
DOOR PLATE X 1	

CLIP NUT X 2	
CORNER CAP X 4	
55mm BRACKET x 3	
NUT & BOLT 3/16” x 6	

HARDWARES

M8x40 MASONRY ANCHOR X 7	
SELF TAPPING SCREW X 200	
2.5mm DRILL BIT X 1	

PLASTIC WASHER & SCREW CAP SHEET X 2	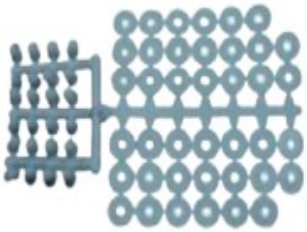
PHILIPS HEAD DRIVE BIT X 1	

F36-S ASSEMBLY MANUAL

SHEET IDENTIFICATION

SHEET	C
DESCRIPTION	WALL PANEL
LENGTH "X"	1800mm
QTY	12

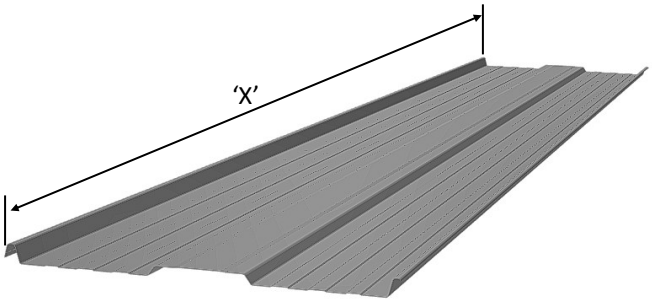

SHEET	D
DESCRIPTION	WALL CORNER PANEL
LENGTH "X"	1800mm
QTY	3

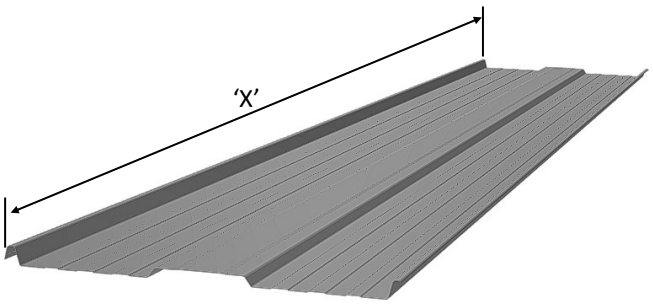

SHEET	E
DESCRIPTION	ROOF SHEET
LENGTH "X"	1149
QTY	6

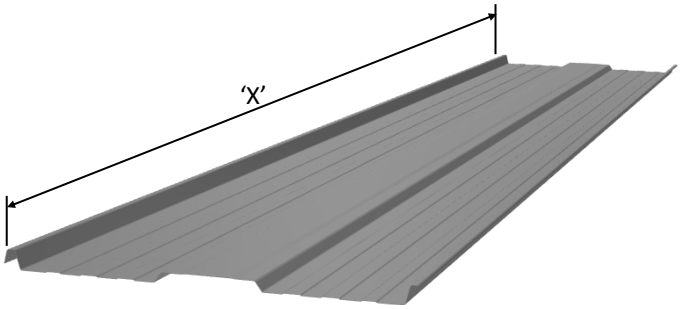

SHEET	F
DESCRIPTION	DOOR PANEL SIDE
LENGTH "X"	1738
QTY	2

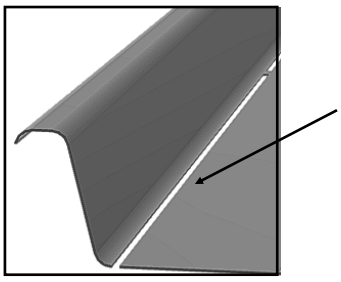

SPLIT CUT ALONG SHEET LENGTH —SMALL RIB SIDE

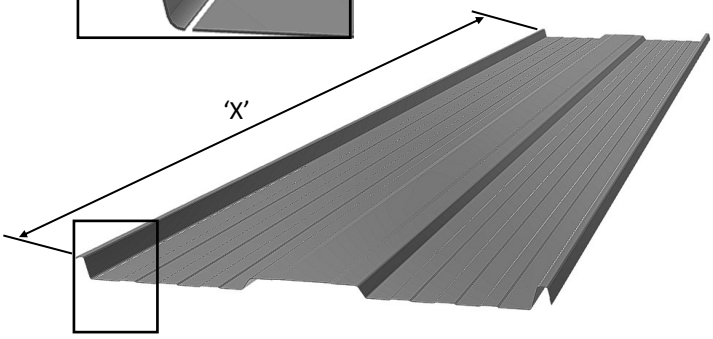

SHEET	G
DESCRIPTION	Door Panel Centre
LENGTH "X"	1738
QTY	1

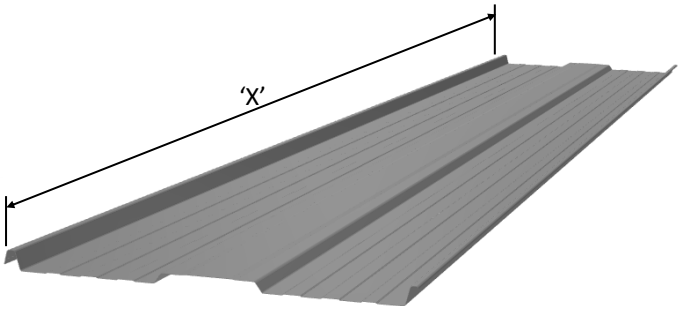

NB: F Door panels come partially Slit

F36-S ASSEMBLY MANUAL

SECTIONS

CHANNEL	H
DESCRIPTION	DOOR FRAME TOP / BOTTOM
OVERALL LENGTH	1008mm
QTY	2

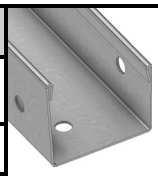

CHANNEL	I
DESCRIPTION	DOOR FRAME SIDE
OVERALL LENGTH	1742mm
QTY	2

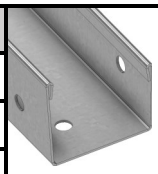

CHANNEL	J
DESCRIPTION	DOOR BOXING
OVERALL LENGTH	1706mm
QTY	2

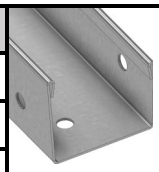

CHANNEL	K
DESCRIPTION	DOOR BRACING
OVERALL LENGTH	1280mm
QTY	2

CHANNEL	M
DESCRIPTION	TOP/BOTTOM — FRONT / REAR
OVERALL LENGTH	2099mm
QTY	4

CHANNEL	N
DESCRIPTION	SIDE CHANNEL TOP/BOTTOM
OVERALL LENGTH	1061mm
QTY	4

CHANNEL	Q
DESCRIPTION	DOOR JAMB CHANNEL
OVERALL LENGTH	1800mm
QTY	2

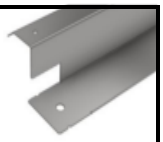

CHANNEL	R
DESCRIPTION	BOTTOM DOOR SPACER CHANNEL
OVERALL LENGTH	1021mm
QTY	1

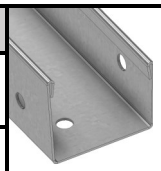

CHANNEL	S
DESCRIPTION	TOP DOOR SPACER CHANNEL
OVERALL LENGTH	1021mm
QTY	1

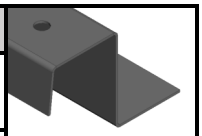

CHANNEL	V
DESCRIPTION	GUTTER TRIM
OVERALL LENGTH	2096mm
QTY	2

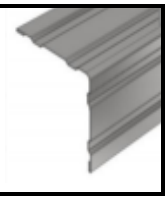

CHANNEL	W
DESCRIPTION	ROOF ANGLE TRIM
OVERALL LENGTH	1141mm
QTY	2

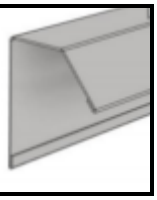

CHANNEL	Y
DESCRIPTION	Door Cannel
OVERALL LENGTH	1800mm
QTY	2

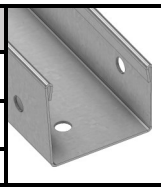

F36-S ASSEMBLY MANUAL

FOUNDATION

RECOMMENDED SLAB REBATE DETAILS

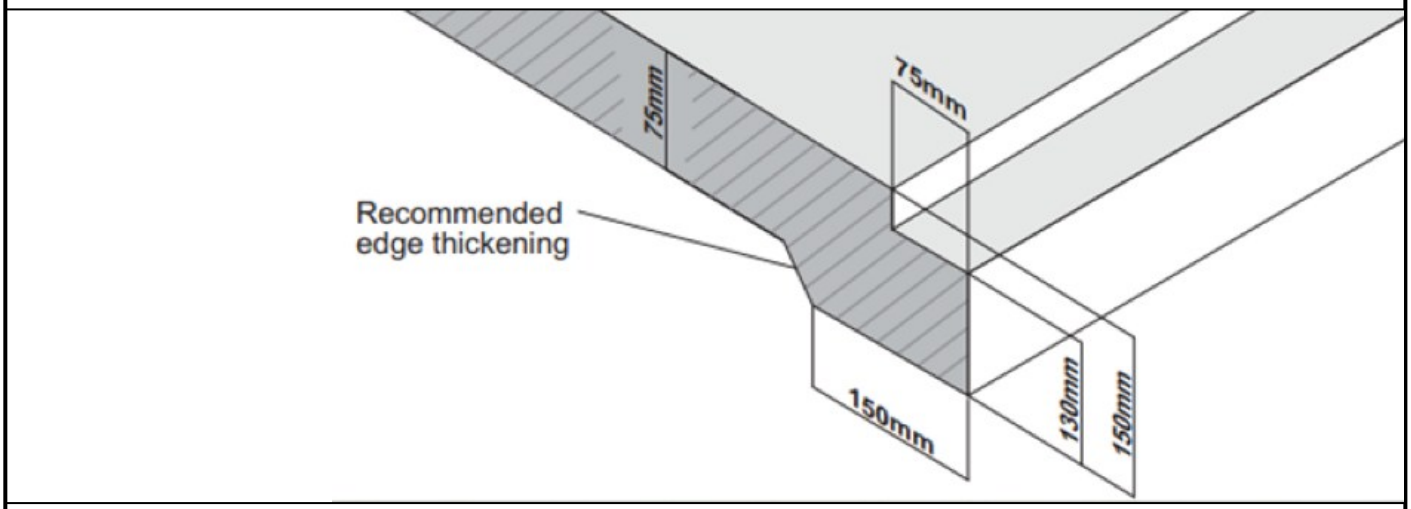

Recommended slab rebate detail

Although not required, it is strongly recommended that, to avoid water leakage around the base of your shed, a rebate be cast into the slab. This will allow the shed to sit below the slab level and prevent water from reaching the upper level of the slab.

If you planning a rebated slab make sure to cut the 4 corners at 60 x 45 degree as shown in detail below

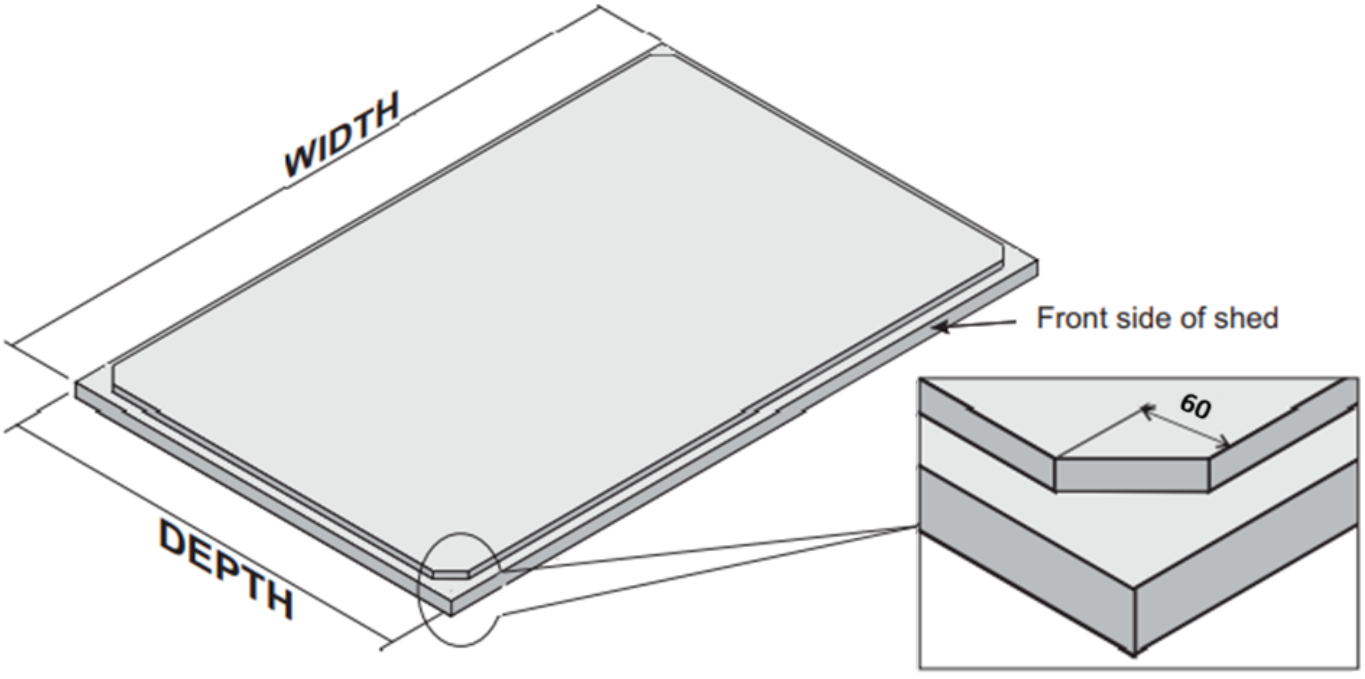

Slab Details Your garden shed must be erected on a solid, level and square foundation. We strongly recommend you pour a concrete slab 75mm thick, reinforced with SL62 mesh (minimum) using dimensions from the table below.

SHED CODE	OUTER SLAB DESIGN (DEPTH x WIDTH)	ANCHORS M8 x 40mm
SLSE-36	1170mm x 2205mm	7

F36-S ASSEMBLY MANUAL

TYPICAL SHEET FIXING DETAILS

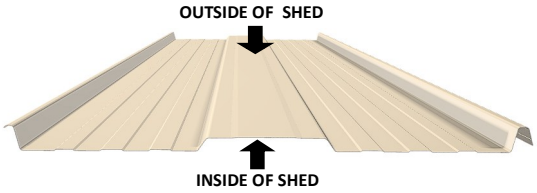

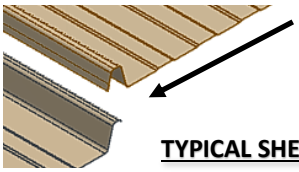

When lapping sheets make sure the end of the a sheets are in alignment with each other.

TYPICAL SHEET

TYPICAL SHEET LAP AT CORNER

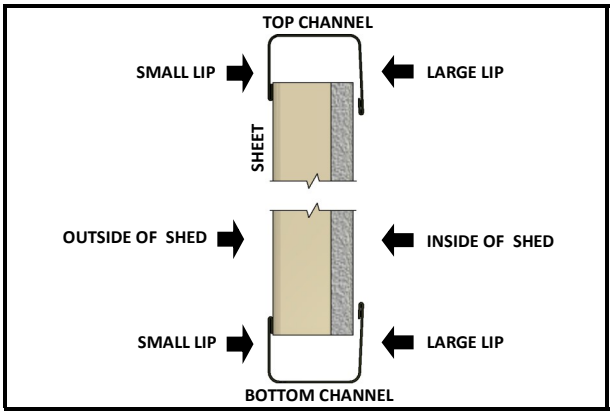

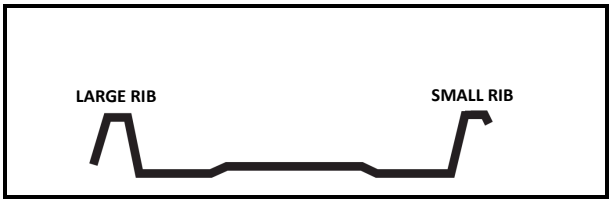

On a clean and uninterrupted work area, we recommend lay suitable wood lengths or work trestles to support the panels off the ground. **DO NOT PUT ANY WEIGHT ON THE SHEETS BETWEEN THE WOOD LENGTHS AS THIS WILL DAMAGE THE SHEETING.**

Locate the required panels and assemble them as shown above. Lay the next sheet on top of the first one making sure the LARGE RIB covers the SMALL RIB. Lightly tap the bottom of the sheet to make the bottom edge in alignment if required.

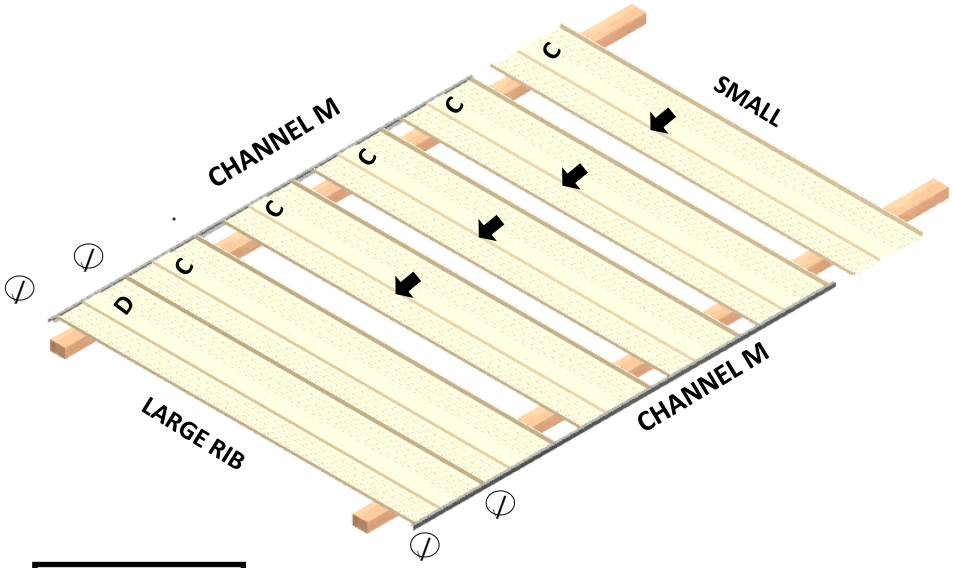

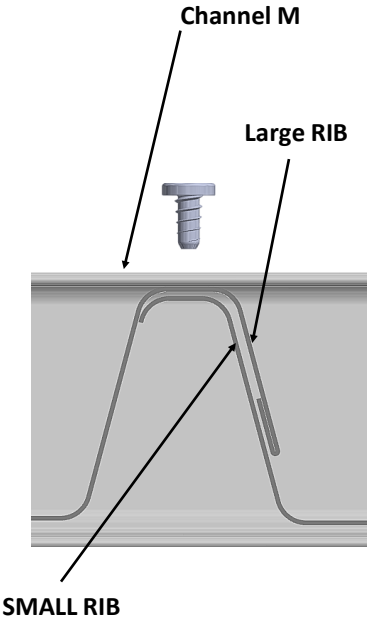

F36-S ASSEMBLY MANUAL

SIDE WALL PANEL (2 REQUIRED)

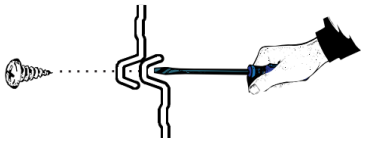

If you are having trouble screwing the channel to the sheets, chock behind the hole .

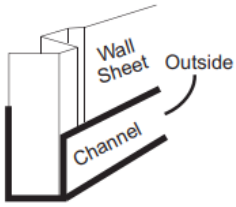

Ensure that the small lip of the channel is to the outside of the shed.

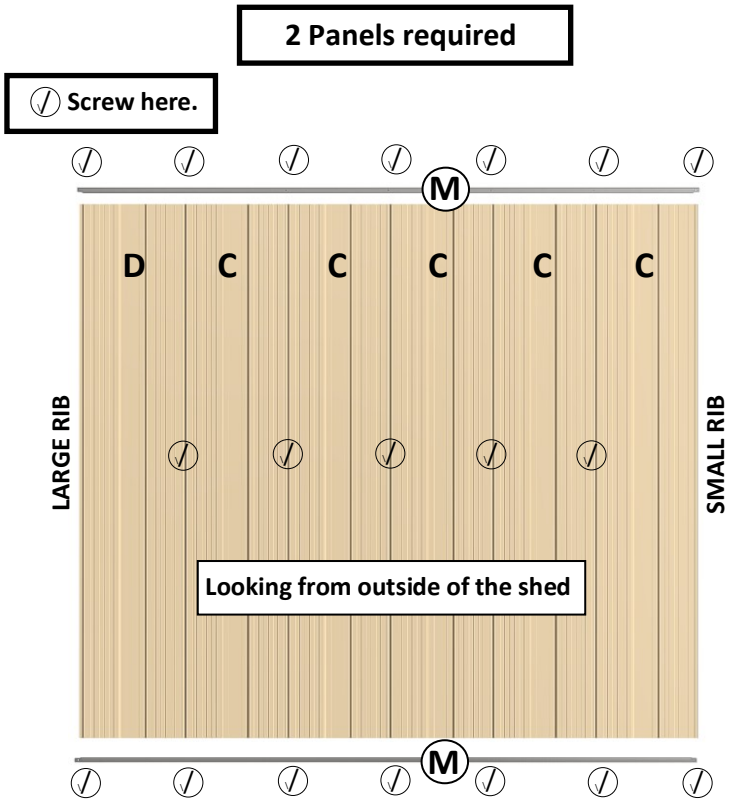

Fit the top and bottom channel to the wall panels. Ensure the channel is flush with the edge of the sheets.

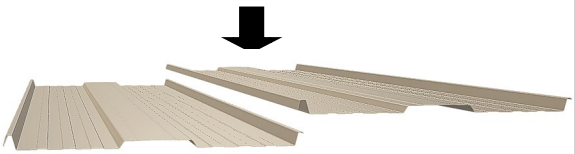

Lay the wall panels (large rib overlapping the small rib).

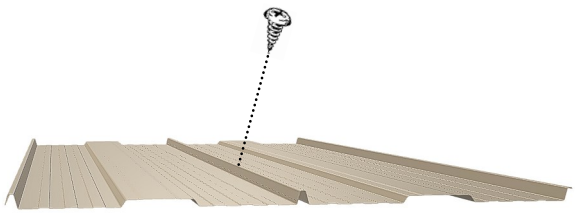

Screw the wall panels at centre of the rib as shown.

Channel ends are orientated to the outer edges of the panel

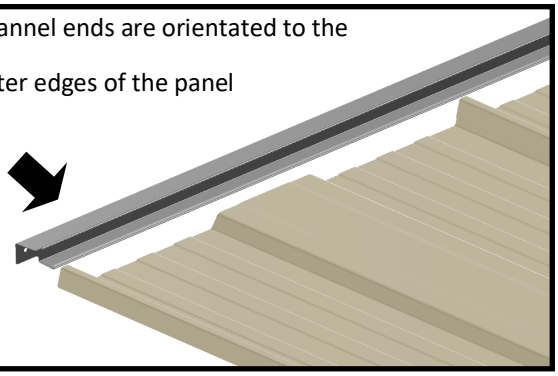

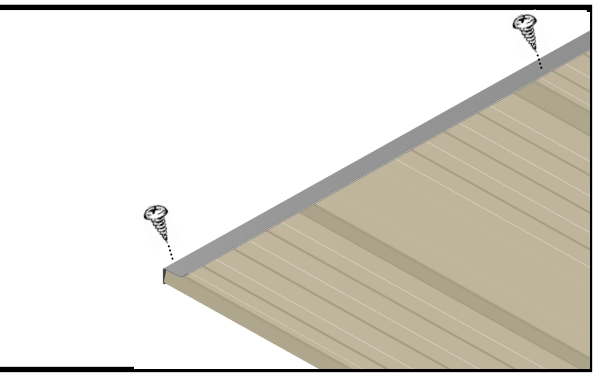

NB: Some channel holes may not align perfectly when the sheets are laid out.

They can be easily manipulated into position and screw to the channel.

F36-S ASSEMBLY MANUAL

REAR WALL PANEL

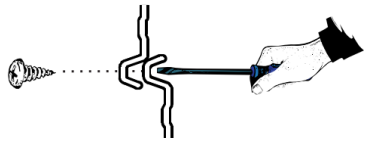

If you are having trouble screwing the channel to the sheets, chock behind the hole .

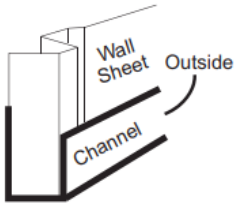

Ensure that the small lip of the channel is to the outside of the shed.

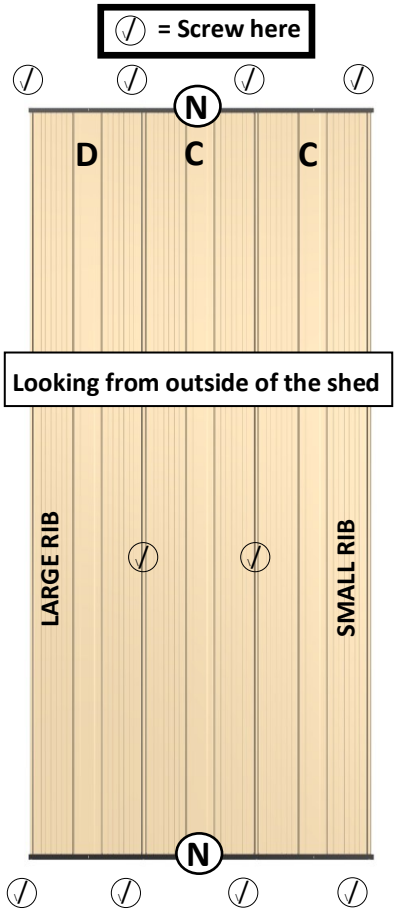

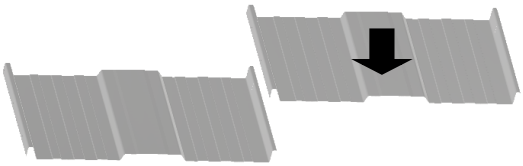

Lay the wall panels out with the large rib overlapping the small.

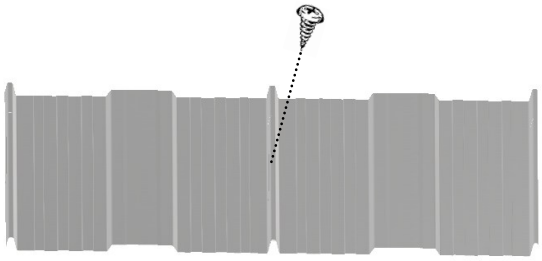

Screw the wall panels at centre of the rib as shown.

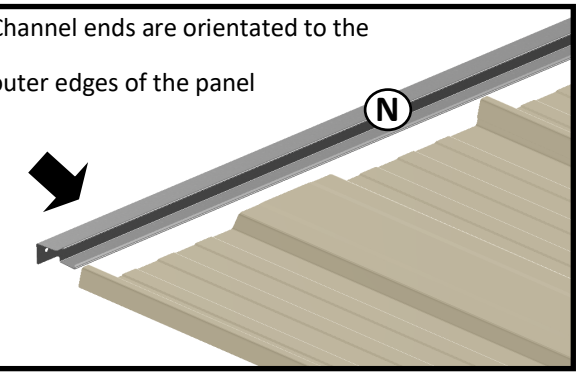

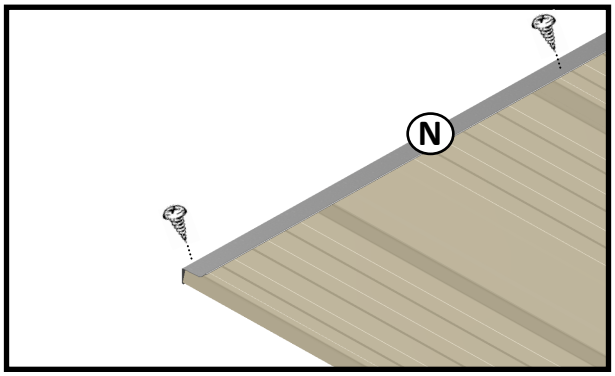

NB: Some channel holes may not align perfectly when the sheets are laid out.

They can be easily manipulated into position and screw to the channel.

F36-S ASSEMBLY MANUAL

STAND AND JOIN WALL PANELS

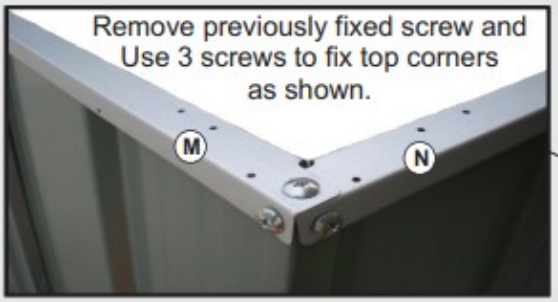

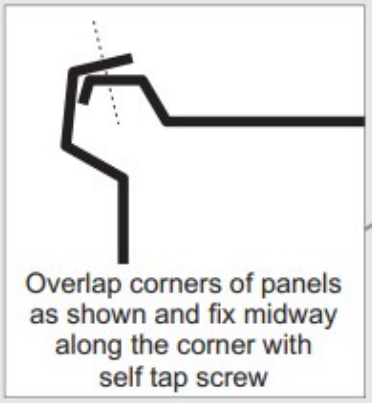

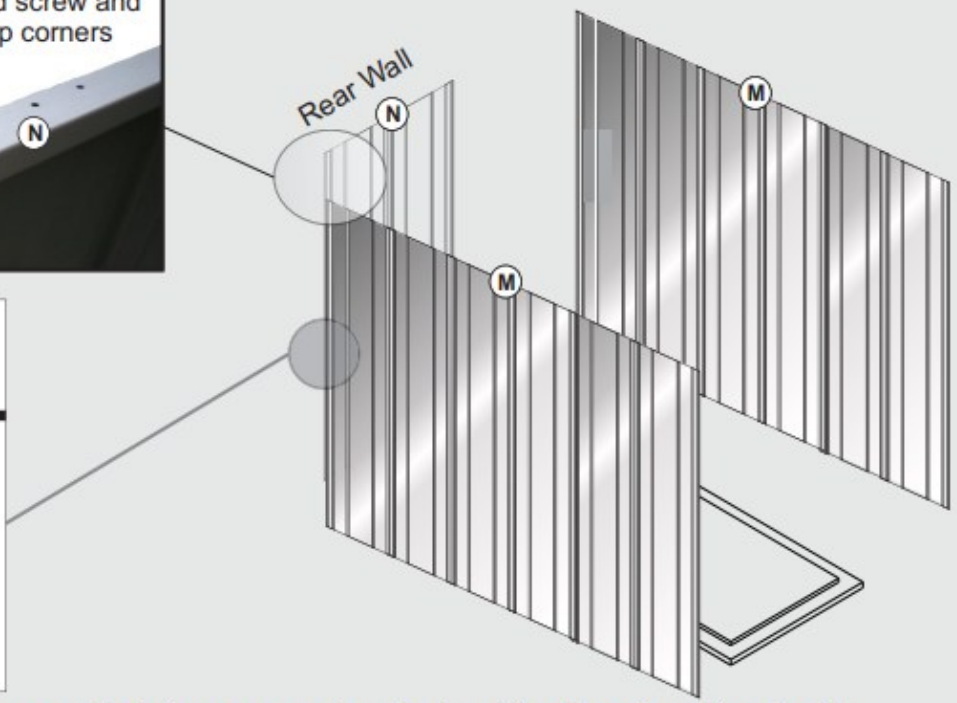

Once the three wall panels are assembled, they can now be stood and fixed together. Fix using the corner brackets and screws as shown below. N.B when assembling large wall models, eg. 7 panels width and above, extra care should be taken, with person two providing adequate support to stop the wall from distorting.

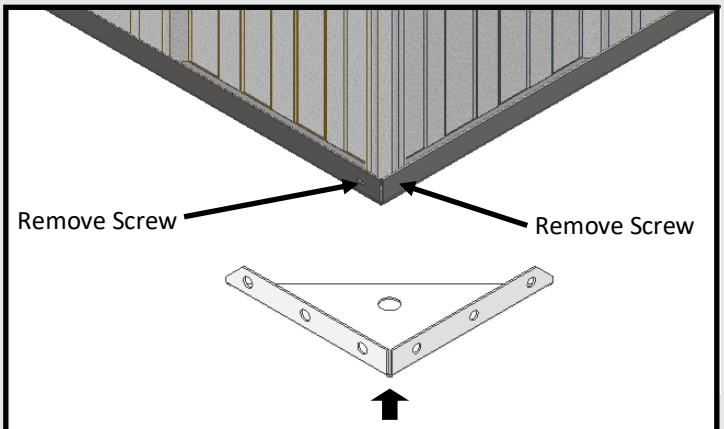

First remove the pre-fixed screws from bottom corner of both panels as marked. Then fix the Corner bracket to the 4 bottom corners

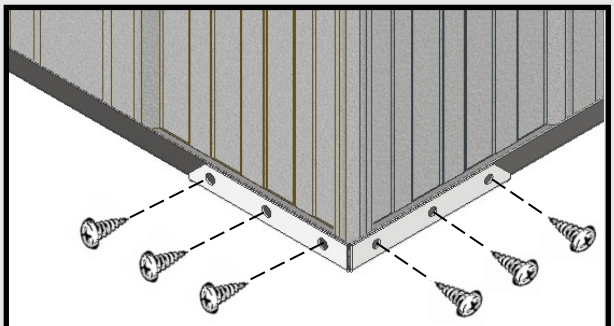

Screw the corner bracket from outside of the shed as shown. Required on all 4 bottom corners

STAND AND JOIN WALL PANELS

Refer to next page (Page 13) for detailed fixing of the door Jamb set up before start assembling

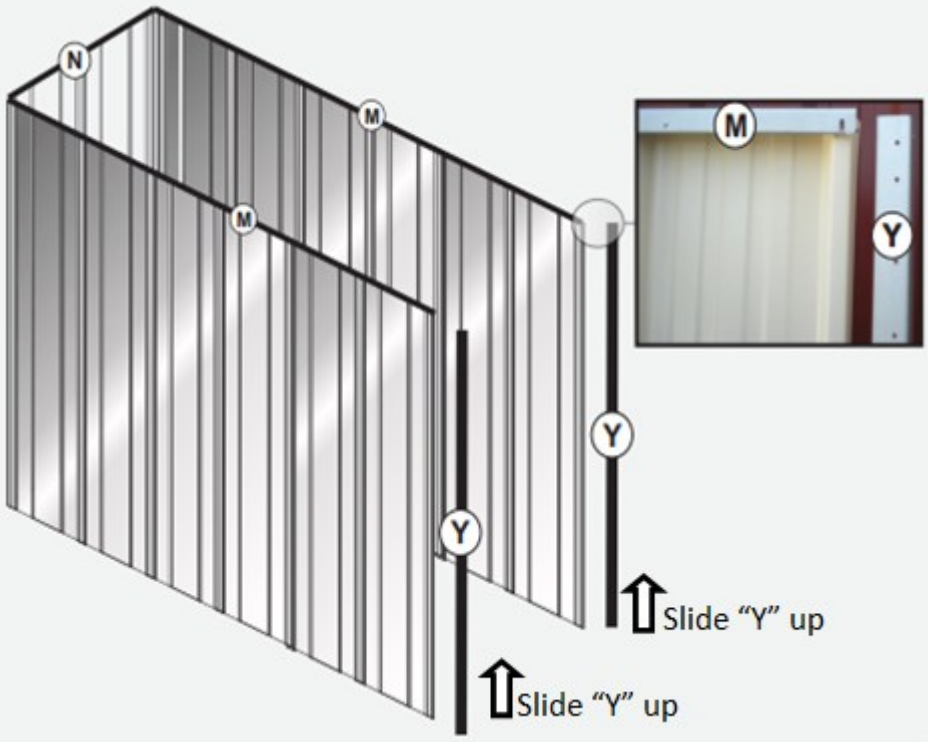

Once the (rear) top and bottom joints are completed its time to place End channel "Y" to both sides

Scan this QR code to find Jamb installation video on YouTube

(https://www.youtube.com/watch?v=DCLNwZfuBxw)

F36-S ASSEMBLY MANUAL

DOOR JAMB FIXING DETAILS

Refer to following page for detailed fixing of the door Jamb set up

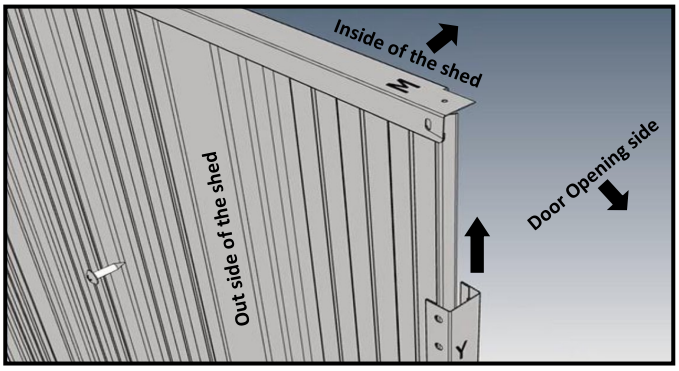

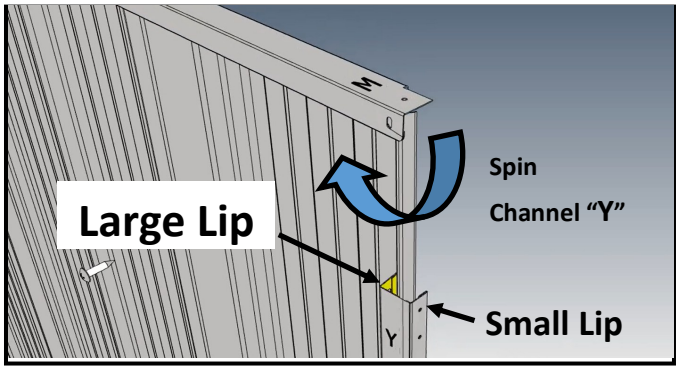

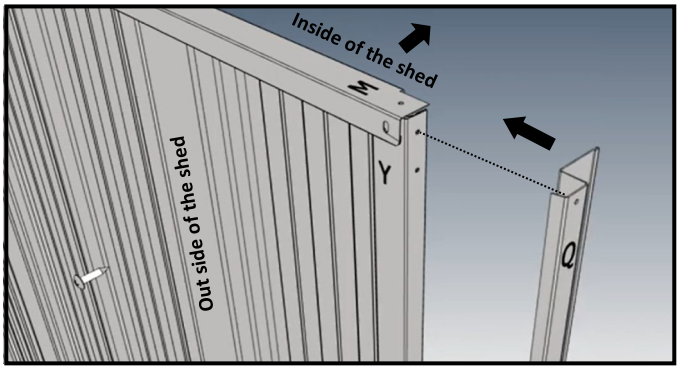

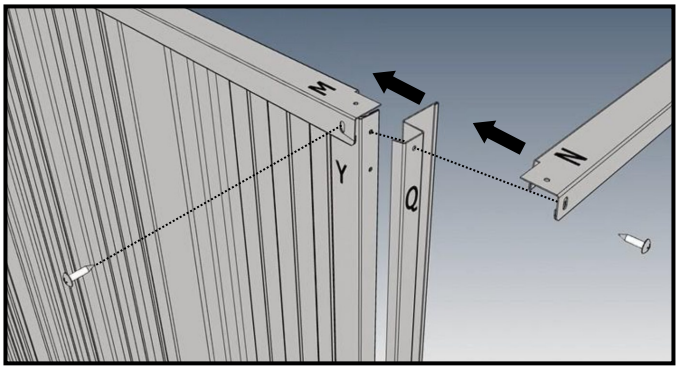

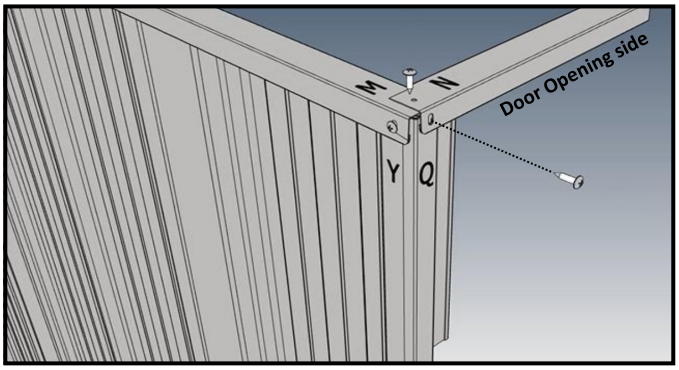

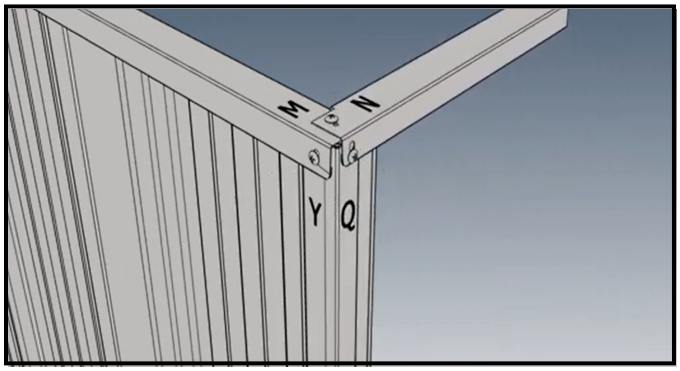

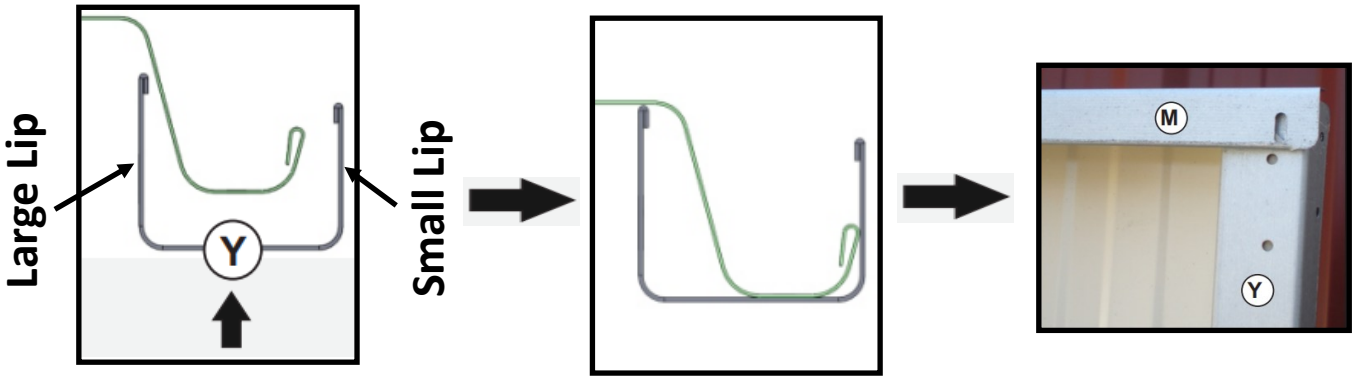

** Similar pattern on other side of the door opening

The smaller lip on the channel "**Y**" needs to protrude outside-facing, not inward or outward. The smaller lip on the 'Y' door frame has a pre-punched hole that lines up with the centre pre-punched hole in the door jamb.

STAND AND JOIN WALL PANELS

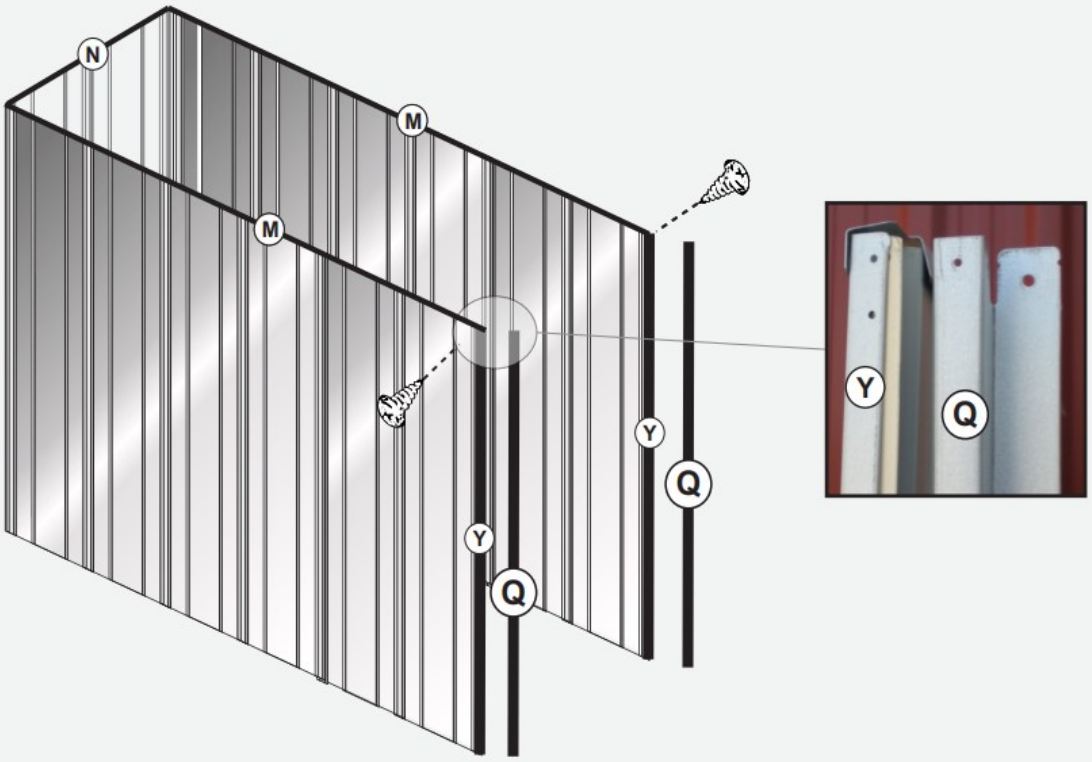

Place door jamb “Q” to the End channel “Y” on both side as shown. Then screw at top on both sides

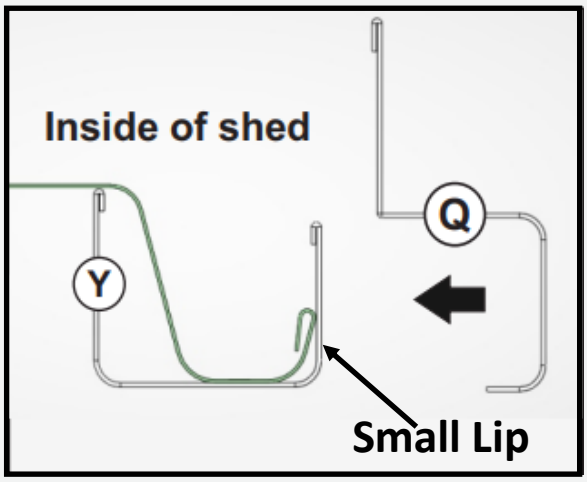

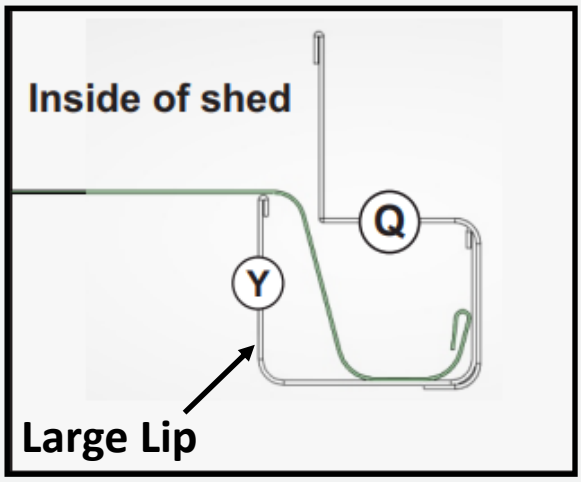

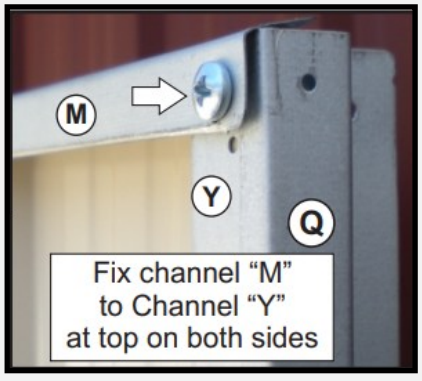

F36-S ASSEMBLY MANUAL

STAND AND JOIN WALL PANELS

Fix side channel "N" to the top and bottom as shown.

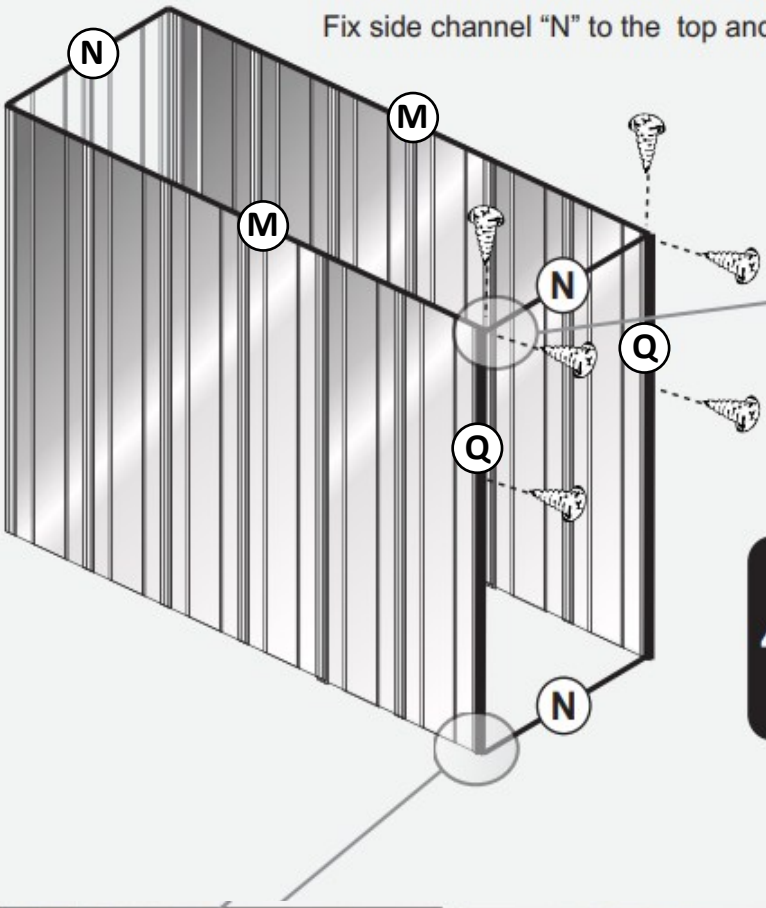

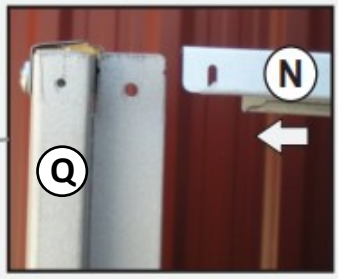

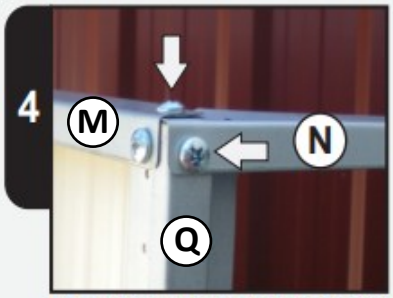

Fix other two screws on top

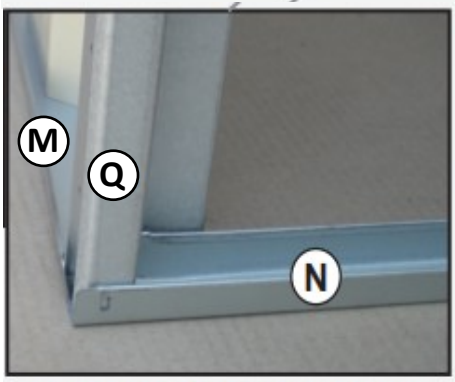

Place the Bottom channel "N"

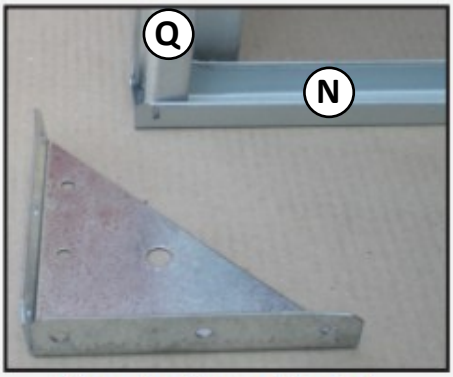

Place the Corner Bracket

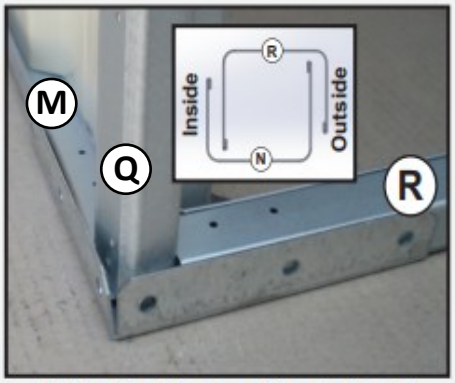

Slide the Corner Bracket and position the Boxing channel "R".

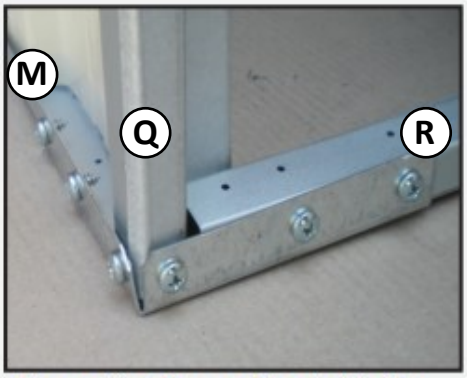

Screw the Corner Bracket to the channel use 6 tek screws to fix

F36-S ASSEMBLY MANUAL

DOOR OPENING

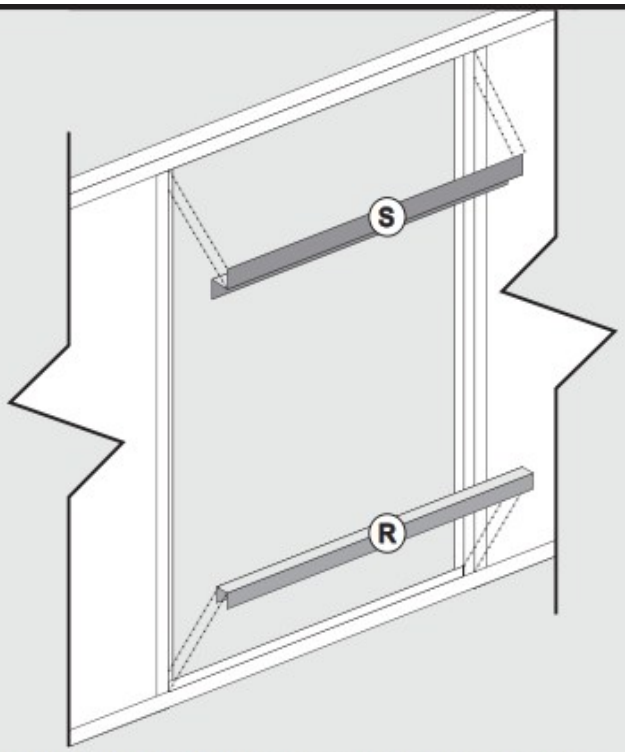

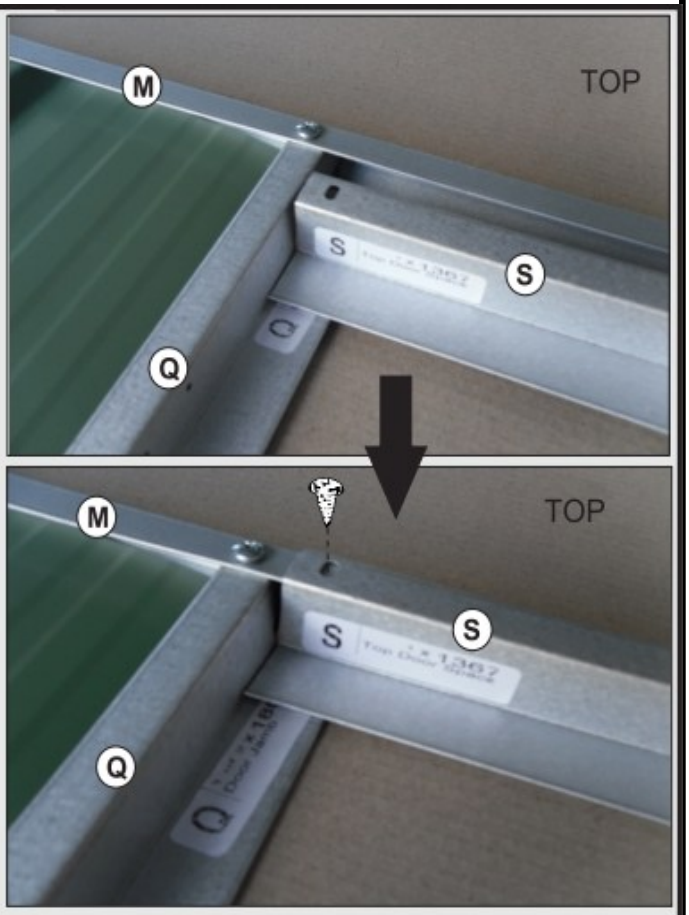

*** Diagram shown for a different model shed but procedure is similar

Fit the top door spacer “S” to the front wall panel as shown. Some pilot holes may need to be drilled with the included 2.5mm drill bit

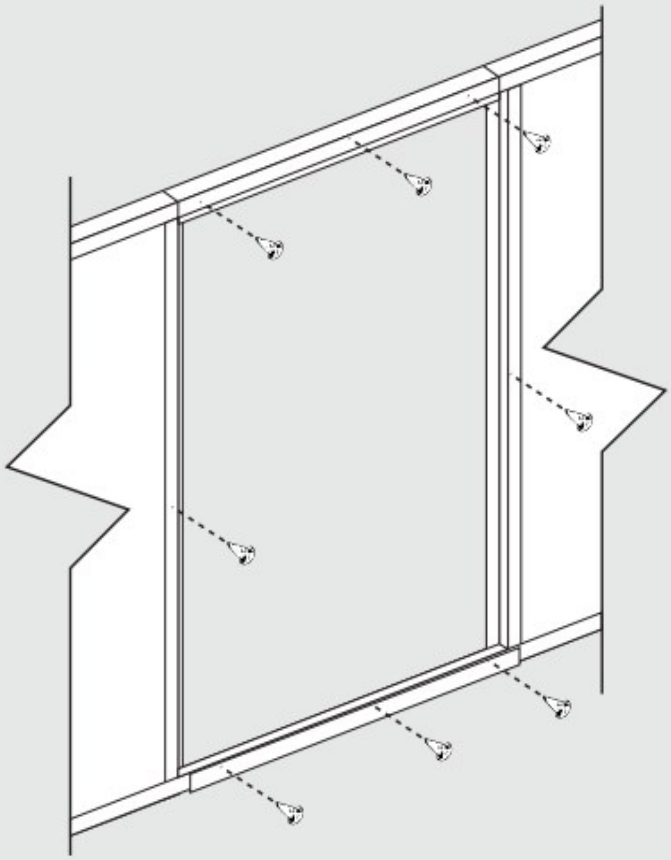

F36-S ASSEMBLY MANUAL

ROOF SHEETING & TRIMS

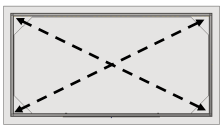

Before fitting the roof sheets make sure the diagonals are equal

X = ORDER OF PLACMENT

Total of 6 roof panels (Only 4 Shown in the picture for reference

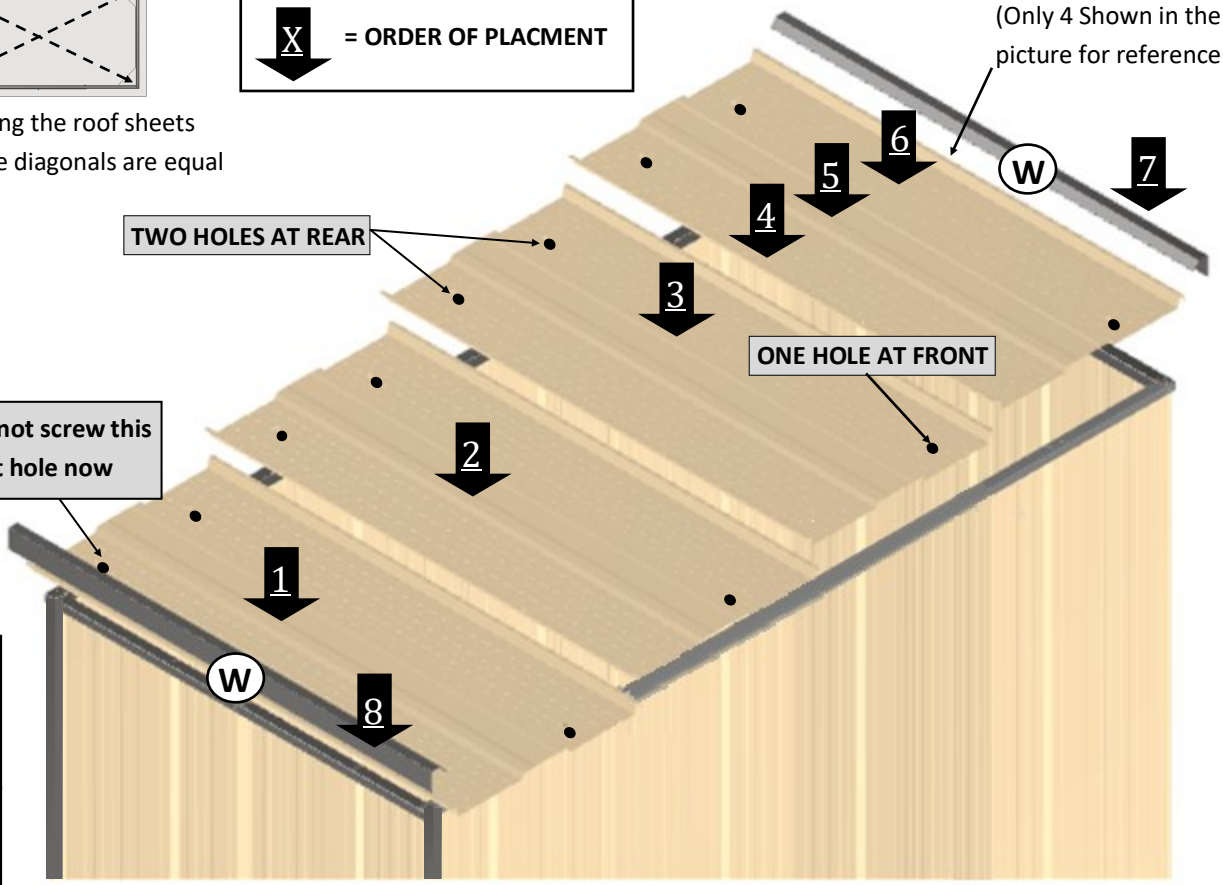

Fit plastic washers to screws

Once the four wall panels are fixed together, the roof Sheets can now be placed one by one as shown to the shed (1 to 6). Be sure to check again that the shed is in square then lift the roof sheets into place and fix with screws as shown below. The holes on the roof sheets align with the channel on top of the front and rear wall.

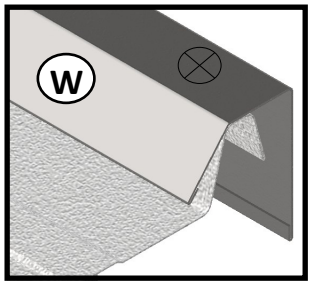

Screw rear side first Leaving first hole for the last

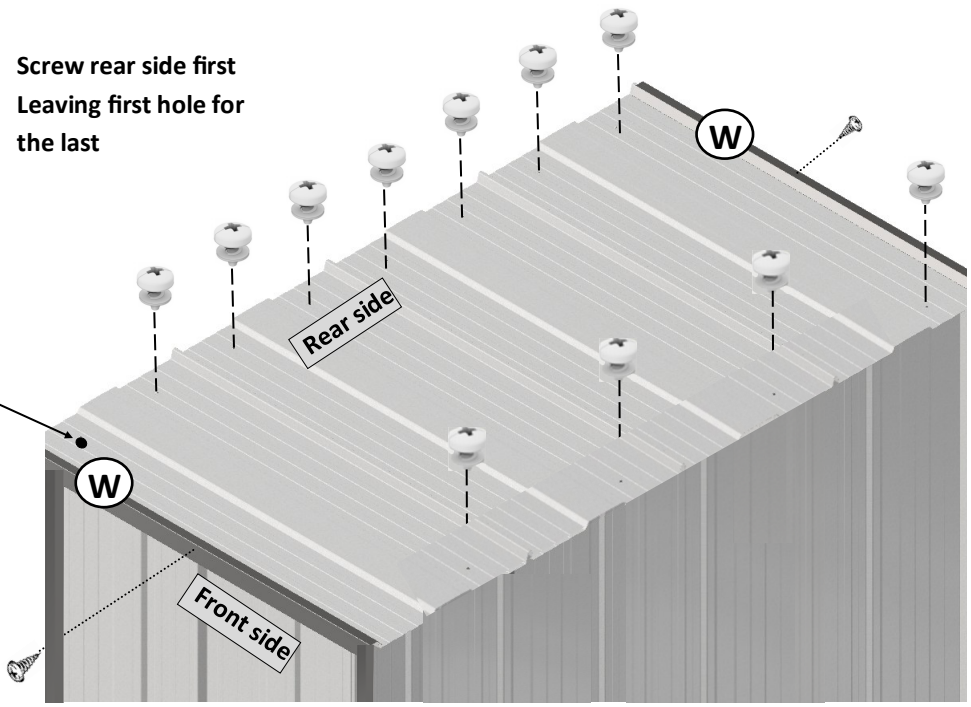

Pre Drill and screw here at last

Remove existing screw from the side panels and refix it with side trim “W” on both sides.

ROOF SHEETING & TRIMS

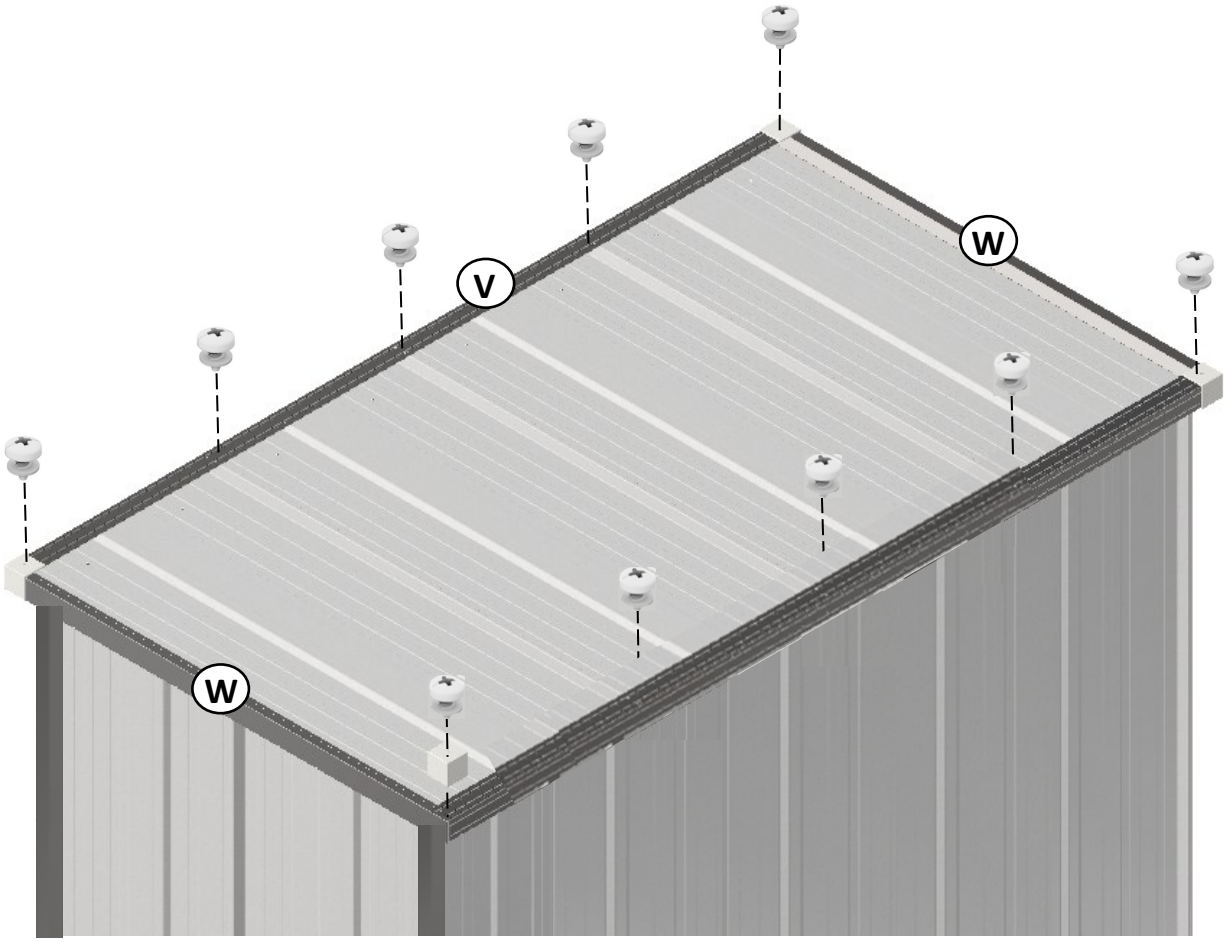

Fix Trim “V” on front and back of the shed. Trim “V” should position on top of Trim “W”. Screw the trim “W” on every rib through pre-punched holes.

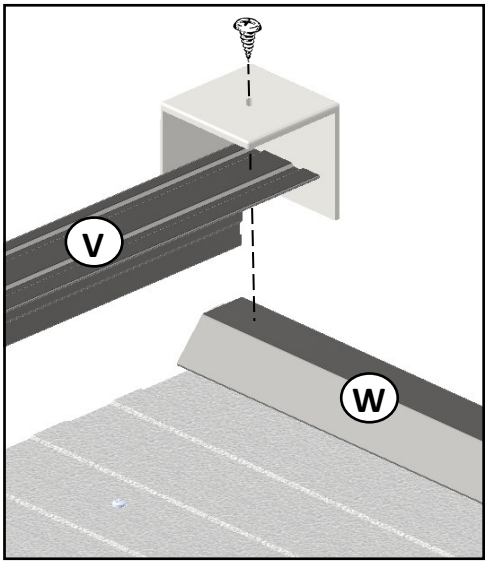

F36-S ASSEMBLY MANUAL

ANCHORING SHED TO SLAB

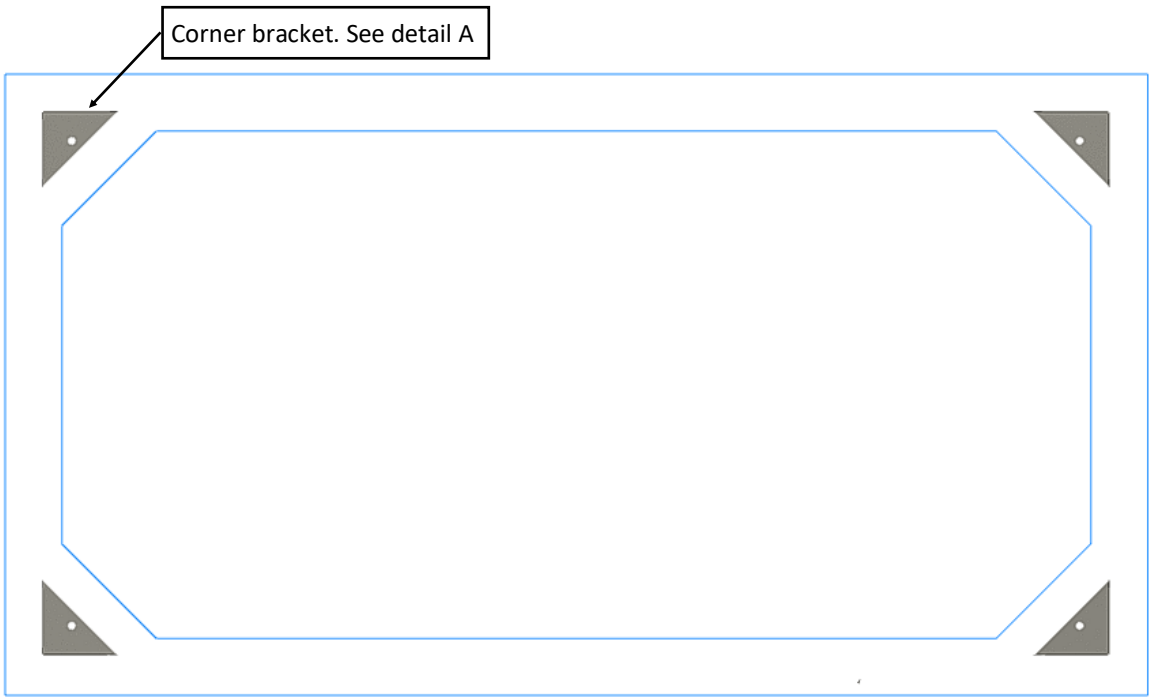

BRACKET FIXING TO SLAB LAYOUT

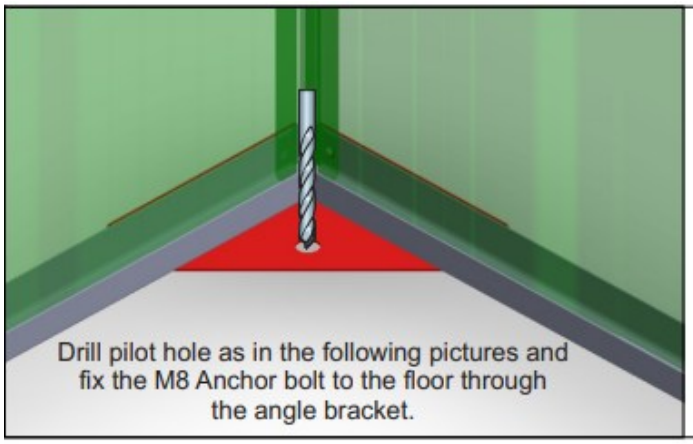

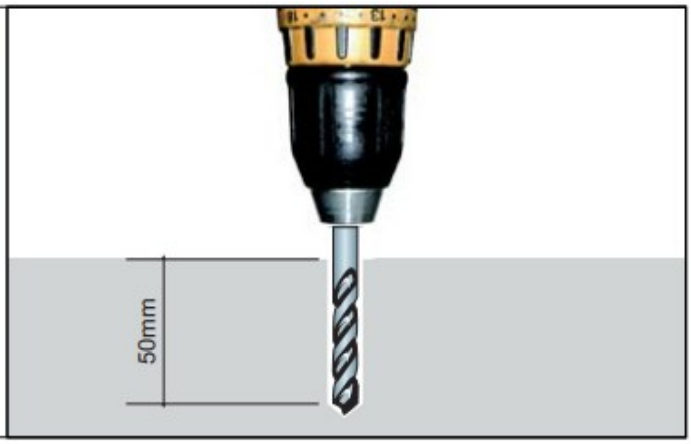

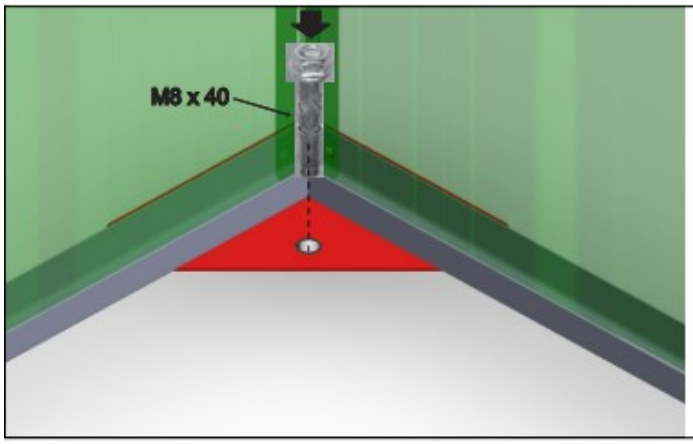

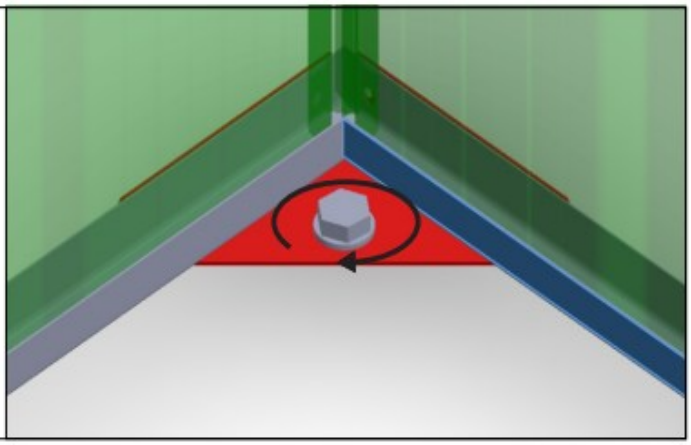

F36-S ASSEMBLY MANUAL

ANCHORING SHED TO SLAB

Bolt the shed down through the angle brackets as shown.

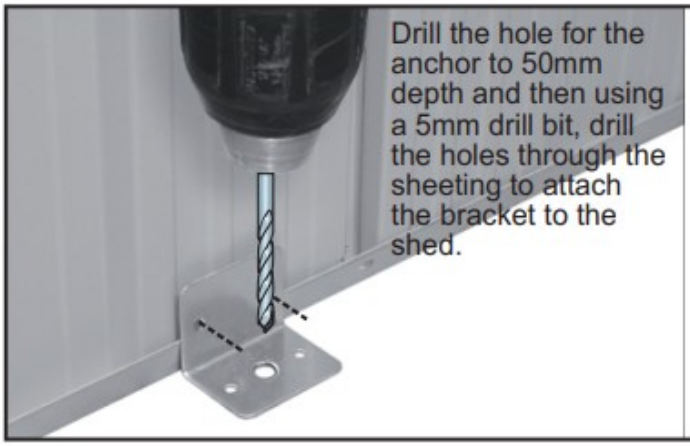

Drill the hole for the anchor to 50mm depth and then using a 5mm drill bit, drill the holes through the sheeting to attach the bracket to the shed.

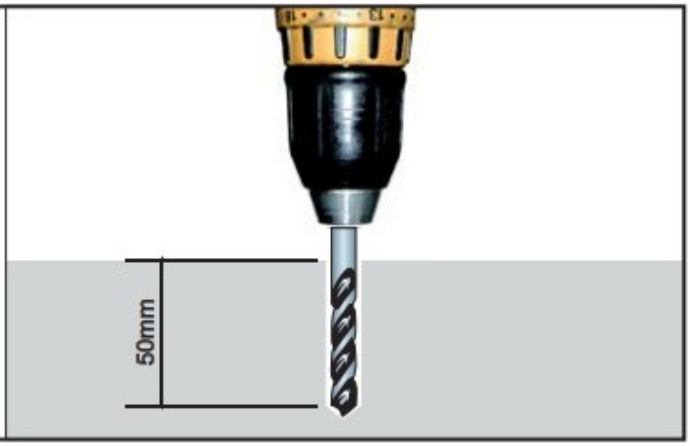

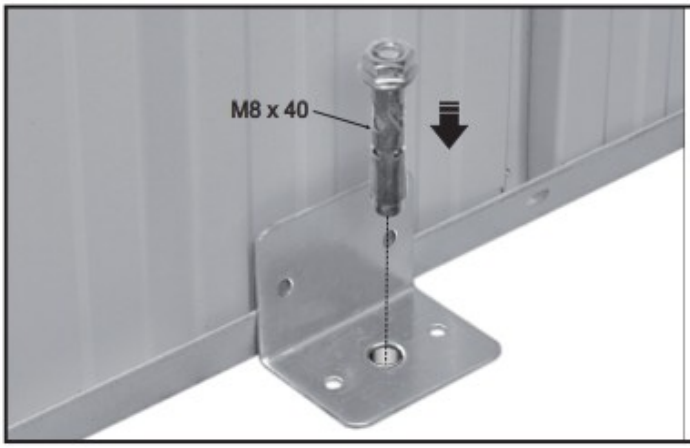

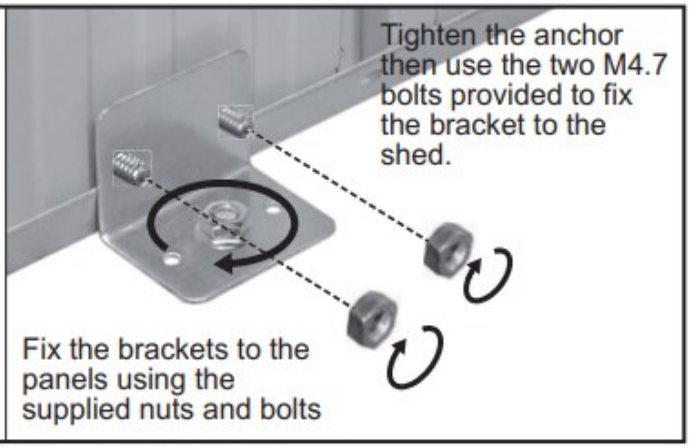

Tighten the anchor then use the two M4.7 bolts provided to fix the bracket to the shed.

Fix the brackets to the panels using the supplied nuts and bolts

F36-S ASSEMBLY MANUAL

DOOR ASSEMBLY

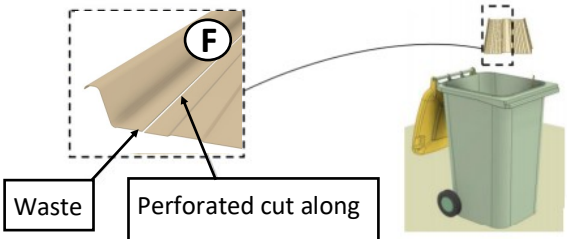

To remove the SMALL lip of the door sheet F, fold back and forth along the perforated pre-cut line. When removed put the waste section into the recycle bin. If too large carefully fold it in half.

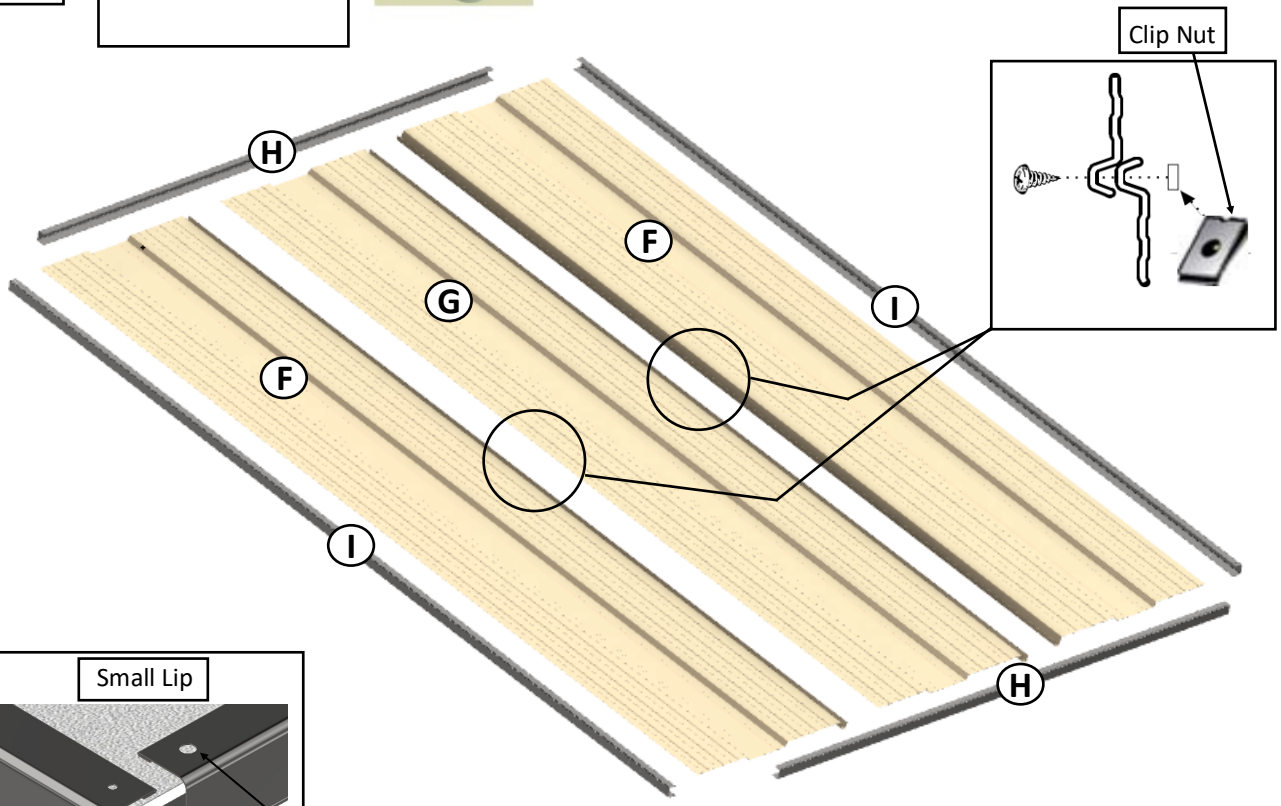

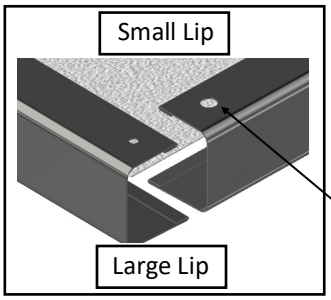

Large Hole on top of small

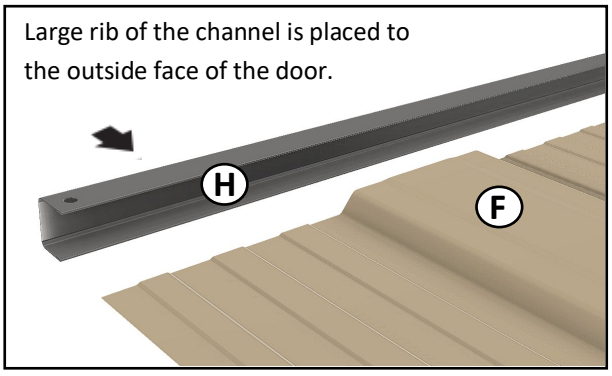

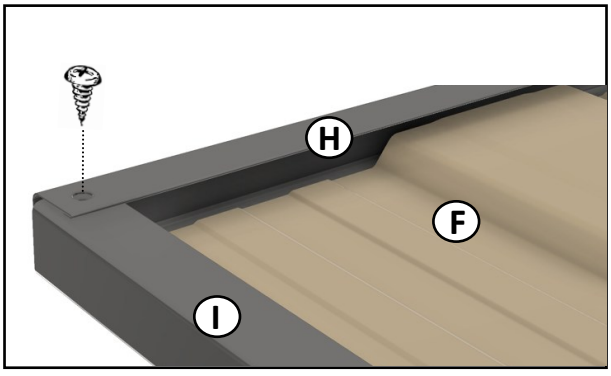

NB: Some channel holes may not align perfectly when the sheets are laid out. They can be easily manipulated into position and screw to the channel.

DOOR ASSEMBLY

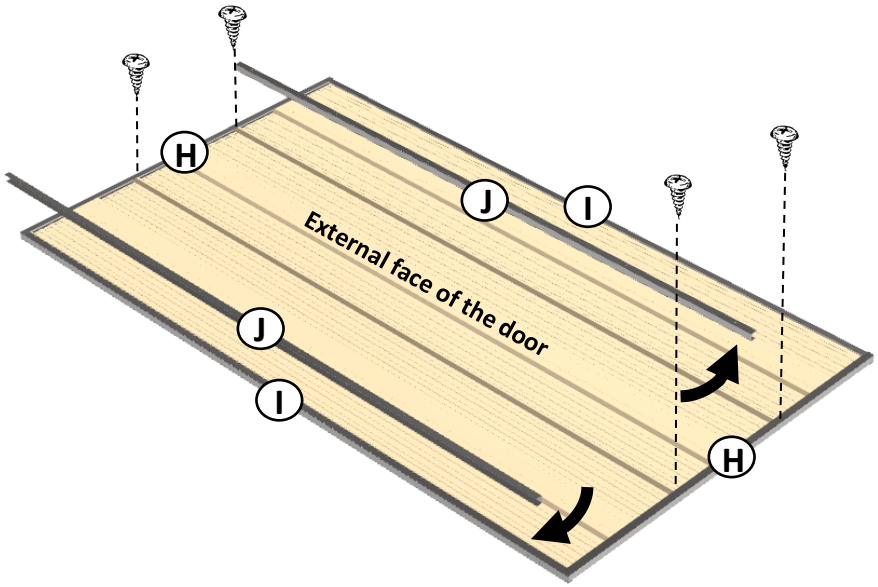

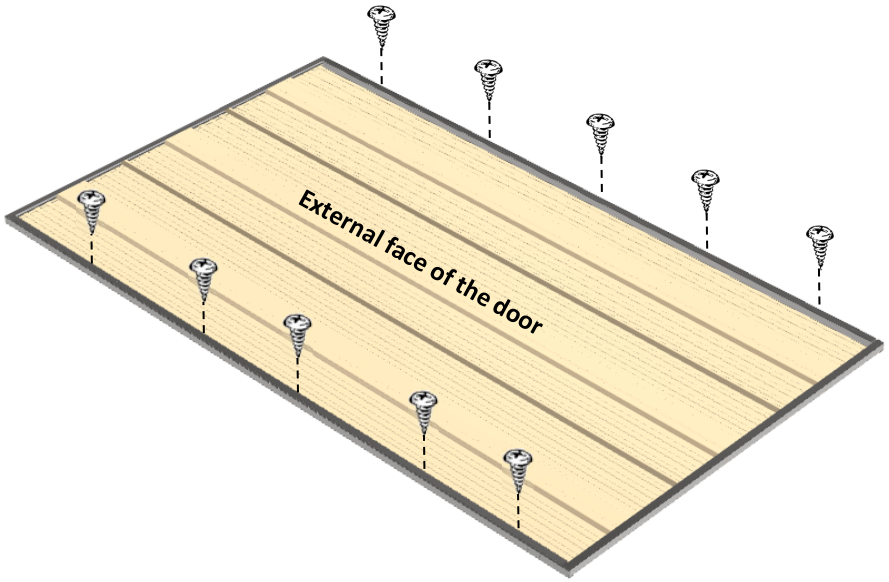

Leave an even gap at both ends of the boxing.

Place large lip of J over the small lip of I as shown

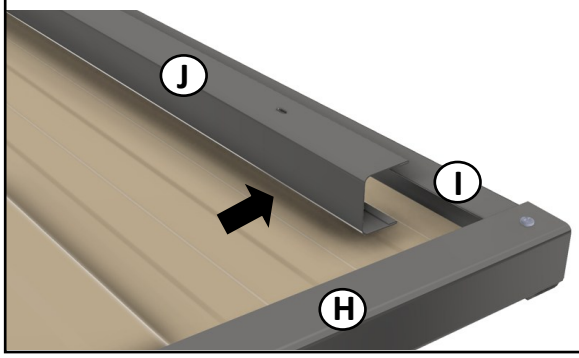

Fix both door boxing in place using six (6) screws.

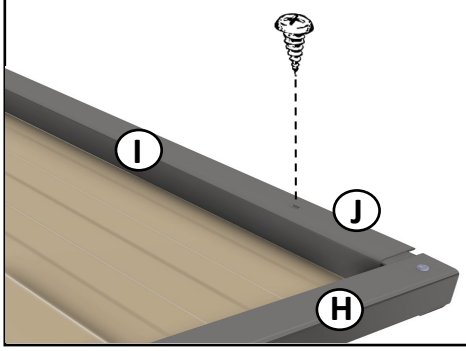

DOOR ASSEMBLY

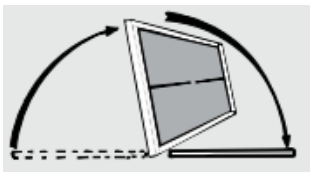

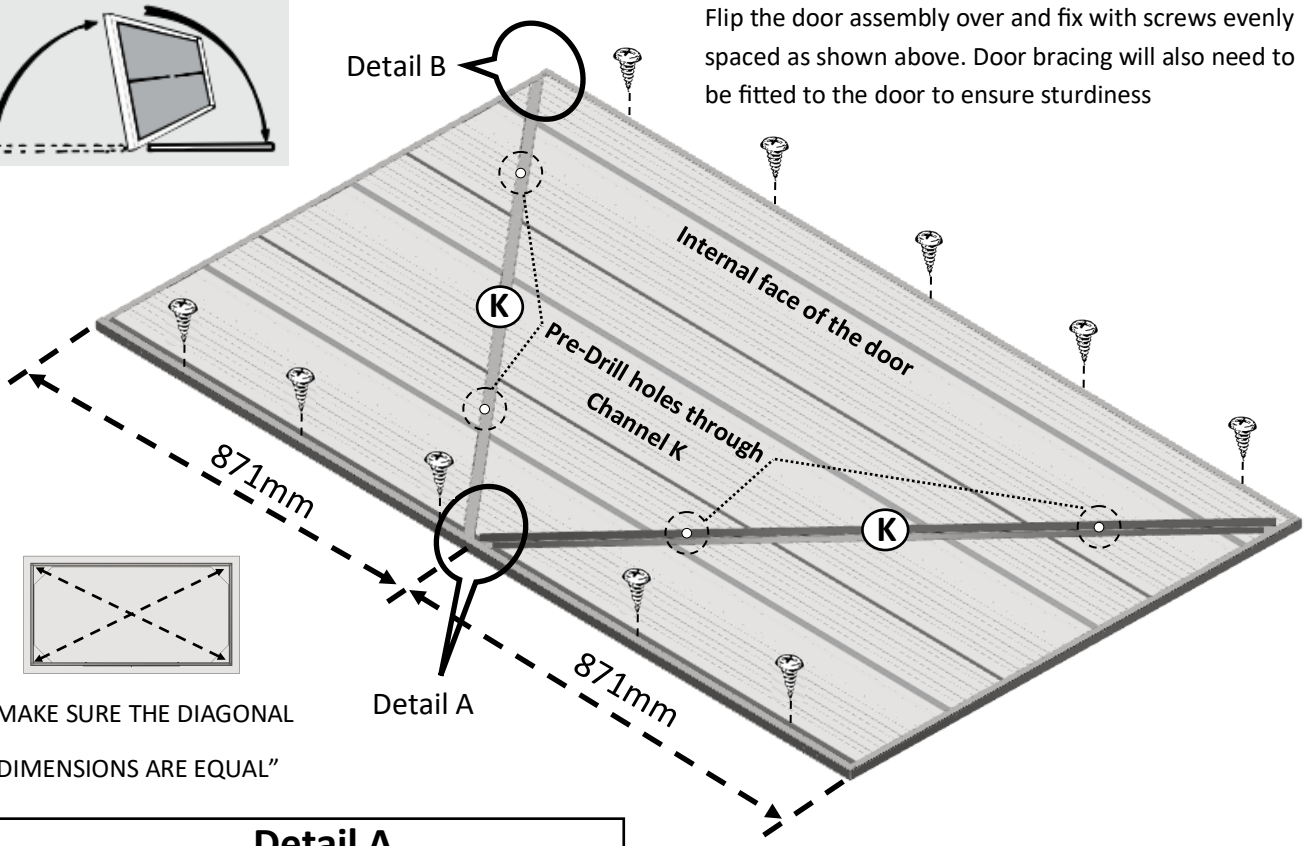

Flip the door assembly over and fix with screws evenly spaced as shown above. Door bracing will also need to be fitted to the door to ensure sturdiness

"MAKE SURE THE DIAGONAL DIMENSIONS ARE EQUAL"

Detail A

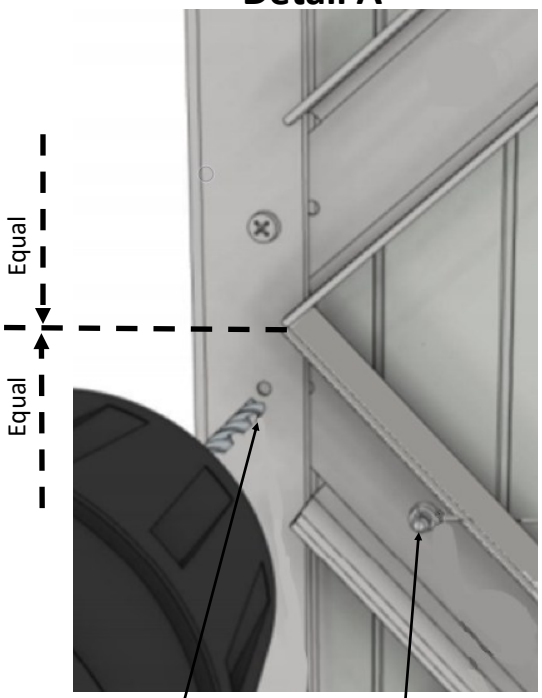

Carefully drill the pilot holes through the inside of the side door frame to catch the door bracing K channel tucked underneath.

Channel K fixed with screw from the front of the door panel.

Detail B

Drill pilot holes for door bracing top joint and fix with self tapping screw. N.B. Channel K brace only narrowly tucks under channels. Take care to drill through channel K with pilot hole.

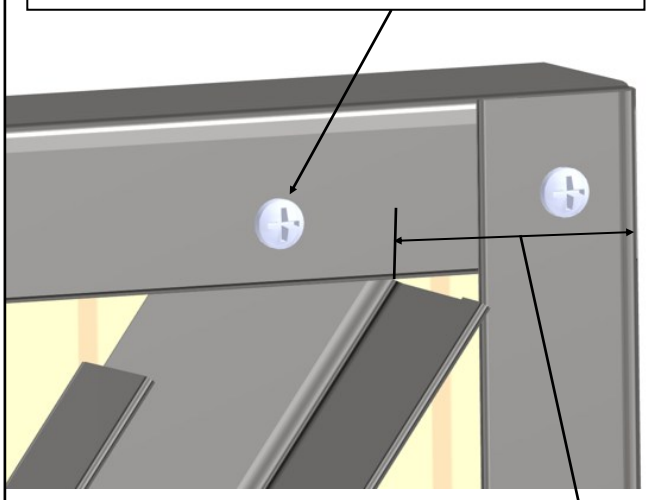

50mm typical at top and bottom door brace as well

F36-S ASSEMBLY MANUAL

DOOR ASSEMBLY

** Shown 2 panel door, procedure is similar for 3 panel doors.

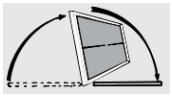

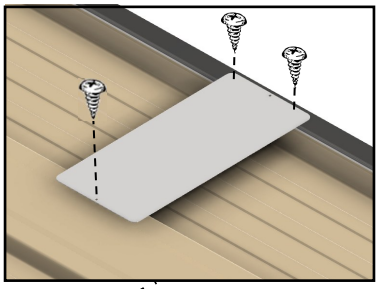

Detail A

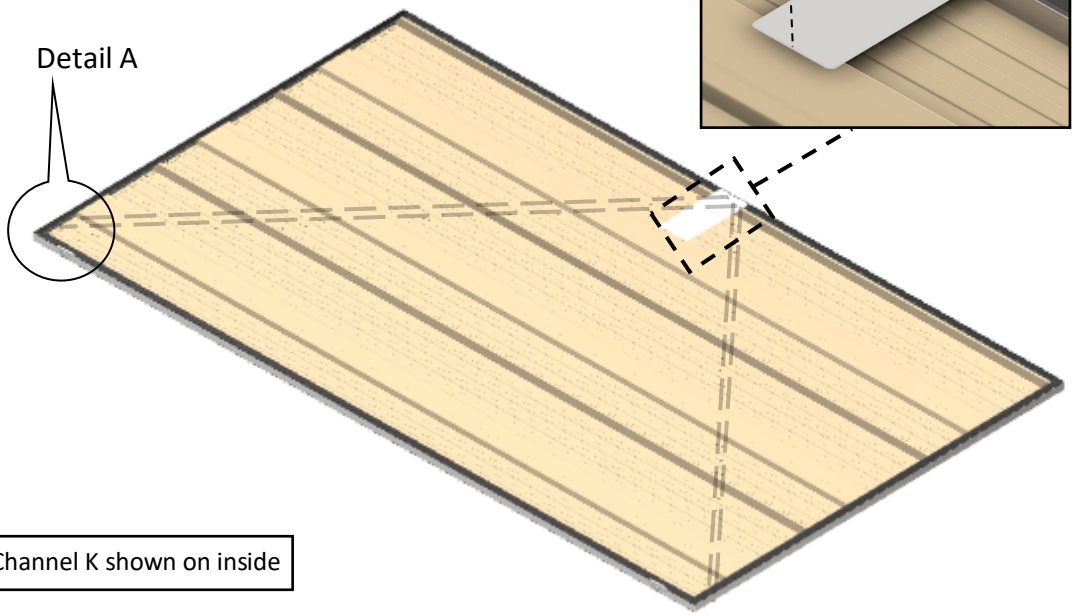

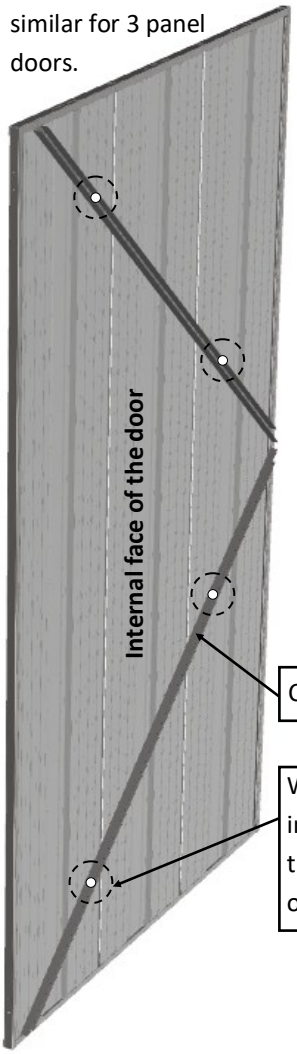

Channel K shown on inside

With the holes drilled through channel K on the inside face of the door, screw fixes the channel K to the inside door face. Screw heads from outside face of door

Detail A

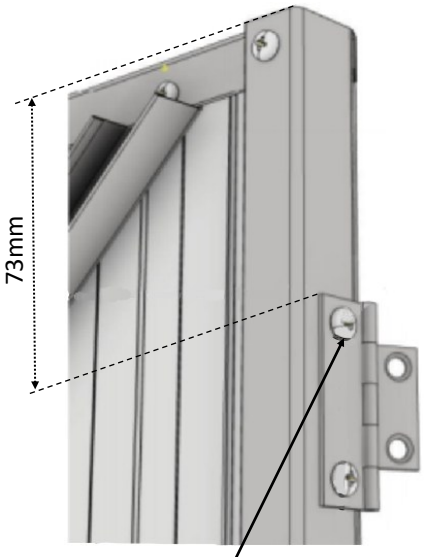

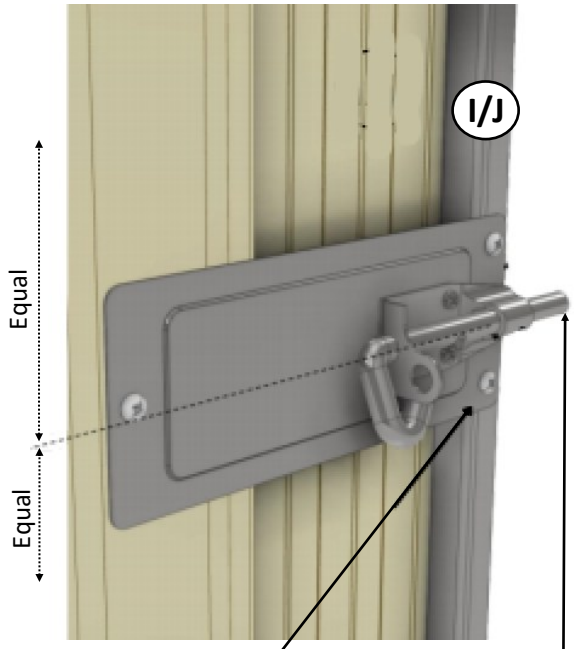

Screw fix the hinge to the side channel I through punched holes. Typical top and bottom

Position the door plate at the center point, using the door plate as a guide to drill pilot holes through channels I / J and door sheeting. Ensure the end of the plate does not protrude past the

Position the pad bolt level and screw fix the pad bolt to the door plate with the screws supplied. Fix the padbolt onto door 1 only.

F36-S ASSEMBLY MANUAL

DOOR FITTING

NOTE: The diagram below shows a 44 flat roof shed. The assembly process is the same for all sheds.

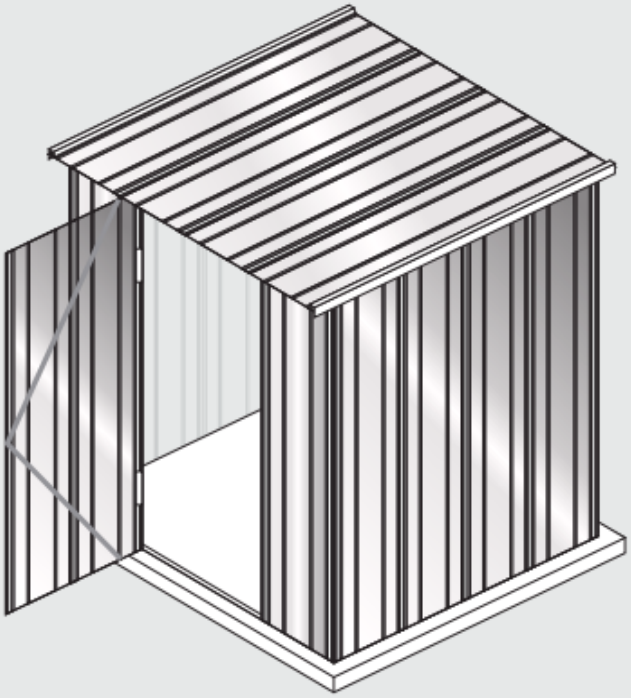

Fit the door to the left or right by fixing the hinges to the pre-drilled holes in the door jambs then fit the padbolt keeper.

STRONG, QUICK & EASY

CARE AND MAINTENANCE (15 YEARS WARRANTY)

Thank you for purchasing the FASTTRAK® system steel garden shed.

Your personal warranty is backed by Steel Sheds Australia, the manufacturer of FASTTRAK® system garden sheds, and our proven commitment to quality and customer service. Our goods come with guarantees that cannot be excluded under Australian consumer law. You are entitled to a replacement or refund of a major failure and compensation for any reasonably foreseeable loss or damage. You are also entitled to have the goods repaired or replaced if the goods fail to be of acceptable quality and the failure does not amount to a major failure. Cost of claiming the warranty will be by the claimant. This warranty is in addition to other rights and remedies of the customer under law.

Eligibility

1. The 15-year warranty is eligible only to the original purchaser/owner of the shed as registered within 60 days from the date of purchase and is not transferable.
2. The warranty is valid for Australia.
3. The warranty is subject to location and local environmental conditions outlined in the warranty exclusions below.

What is covered under the warranty?

FASTTRAK® steel garden shed 15-year warranty is limited to the following specific cover.

1. Zinc and/or galvanized panel materials will not rust.
2. Colored panel materials will not rust, flake, peel, or blister.

Please note the 15-year warranty does not apply to any accessory items such as fasteners, hasp, pad bolts, also including flooring kits, shelving, hook sets, tool racks, etc.

Warranty Qualifications & Limitations

The FASTTRAK® 15-year warranty is subject to the following qualifications and limitations

1. Warranty does not apply to surface deterioration of the panels caused specifically by a. ”Swarf" (tiny particles of steel debris left from cutting, grinding, or drilling operations) that have not been dutifully removed during the assembly construction process. b. As a result of contact with damp soil, chemicals, fertilizers, or other corrosive substances.
2. Warranty does not cover damage caused by storms, wind, rain, hail, snow, or any other adverse environmental event or ”act of god”.
3. Warranty only applies if the shed is used solely for domestic purposes and installation is in accordance and compliance with the FASTTRAK® instruction manual and manufacturer recommendations.
4. Warranty does not apply if the shed is installed/located in a. Ocean/surf locations (typically defined as within 1km from coastal or tidal locations), b. Severe industrial locations c. Unusually corrosive environments (e.g. Geothermal / Sulphuric conditions)
5. Warranty does not cover any damage as a result of a. Any impact b. Due to poor foundations c. Modifications d. The build-up of debris on or in roof or walls e. Poor assembly and/or construction.
6. The warranty will be void if the shed has been relocated from its original location/address.
7. The warranty is limited to the replacement and delivery of panels and specifically excludes any labour, installation, or removal/disposal costs.
8. Warranty applies to the exclusions of all other representations, guarantees, or warranties, either expressed or implied unless otherwise required by applicable legislation.
9. Your warranty registration certificate and supporting documentation must be completed and lodged within 60 days of he date of purchase.

Warranty Claims

All warranty claims should be made in writing sent directly to:

Steel Sheds Australia, PO Box 1581, Browns Plains, Queensland, 4118

Claims must include:

1. Original proof of purchase documentation.
2. Relevant contact information.
3. Product model.
4. Photographic evidence.
5. Description of the damage.

STRONG, QUICK & EASY

CARE AND MAINTENANCE (15 YEARS WARRANTY)

OWNERS DETAILS	
Owners Name:	
Street Address:	
City:	
Post Code:	
Email Address:	
BUILDING DETAILS	
Product Model Number:	
Colour:	
Place of Purchase:	
Purchase Date:	

Please attach here photocopy of proof of purchase. Retain the original for your records.

You must submit your warranty registration certificate within 60 days of the purchase date of your FASTTRAK® garden shed. Email / Post your certificate and supporting documentation to:

https://spanbiltdirect.com.au/warranty-registration

OR

Steel Sheds Australia

PO Box 1581.

Browns Plains,

FASTTRAK

STRONG, QUICK & EASY

Enquiries

07 3827 8000

Building Advice Line 1800 032 077

Email: info@steelshedsaustralia.com.au